Back

Wrapping Up Mods To The Classic Scott Amp

SEPTEMBER 2006
US $7.00 • Canada $10.00

audioXPRESS

The Audio Technology Authority

Construct This Low-Cost Hybrid Amp

A Simple Two-Way Speaker You Can Build

Low-Noise Head Amp Design

High-Quality Tube Preamp

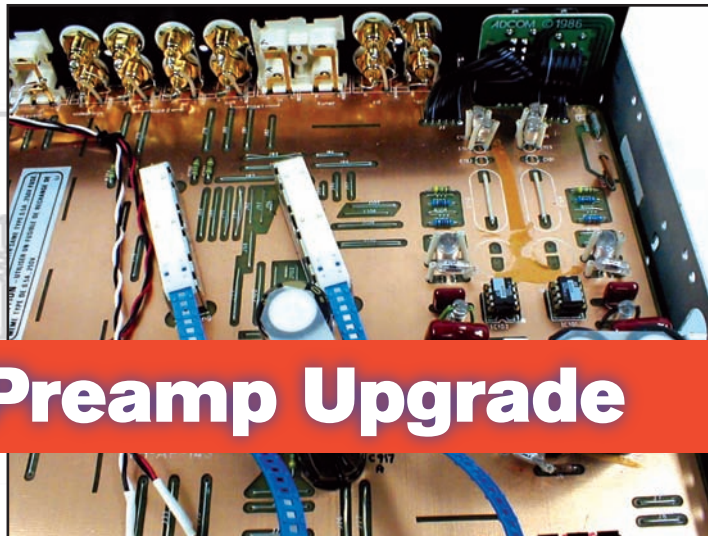

Adcom Preamp Upgrade

www.audioXpress.com

An Audiophile-Grade Tube Preamp

Build this high-quality tube preamp and you'll hear the difference in your audio setup.

By Cornelius Morton

I designed the tube preamplifier described here with the following requirements:

• Operate the tubes reasonably near the points where the manufacturer specified the tube parameters; spec points for the 6922 are 12mA Ip and 15mA Ip at 90 and 200V B+. This ensures that rp and gm are stable over the normal operating range of the circuit.

• Select plate loads and operating points so that the load line intercepts near equally spaced grid lines at the operating point.

• A passive and accurate RIAA compensation network in the phono stage.

• A separate power-supply box and a power-supply topology that simulates a separate supply for each channel.

• Input level controls for each source so that the volume levels do not change between sources.

• No feedback used in the design.

PHONO STAGE

In **Fig. 1** the power-supply voltage divider/filter supplies 118V DC B+ to V1A. The 8.7kΩ plate load resistor, R2, and the 150Ω self bias resistor, R3, set the operating point at Ep = 61V DC and Ip = 6.6mA. This is close enough to the spec point to set gm to 9900µS (microsiemens) and rp to 3.33kΩ, resulting in an output impedance of 2400Ω and a raw gain of 23.8.

The equivalent noise resistance is 200Ω at a gm of 12500µS. The design point of 9900µS should keep the equivalent noise resistance below 300Ω, resulting in a quiet phono stage. R1, a 47kΩ resistor, provides the nominal load for a moving-magnet cartridge.

The phono input is a coaxial cable between the phono-in jack and the grid of V1A and connected at the grid ground. RIAA compensation is provided by the RC network, R4, R5, R6, R7, C2, C3, and C4. Neglecting the frequency effects of the compensation network, the series resistance reduces the first stage gain to 22.8 at the grid of V1B. The RIAA compensation further reduces the gain by a factor of ten at 1kHz, -20dB.

C1 bypasses R3 to a frequency well below 10Hz. V1B has a B+ of 151V DC. The 10kΩ plate load, R8, and the 180Ω cathode resistor R9, bypassed by C5, set

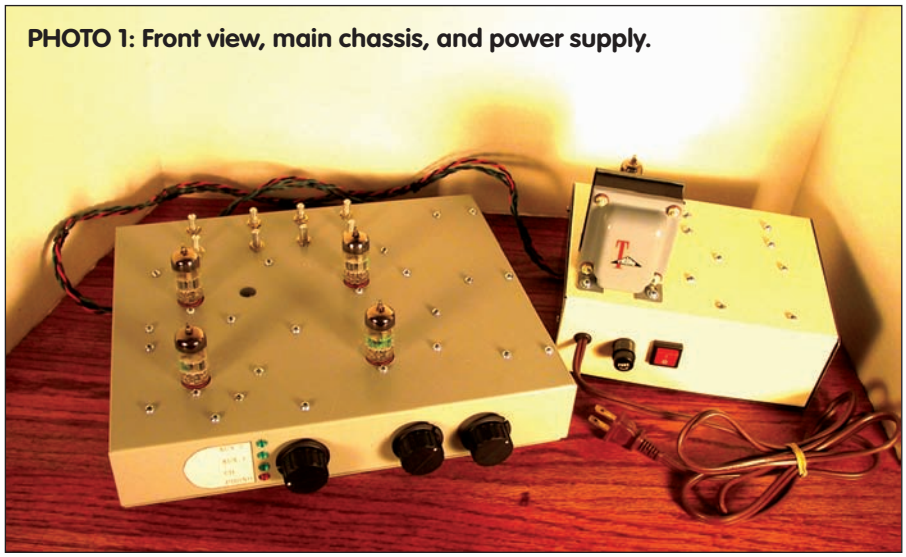

PHOTO 1: Front view, main chassis, and power supply.

FIGURE 1: Phono stage schematic.

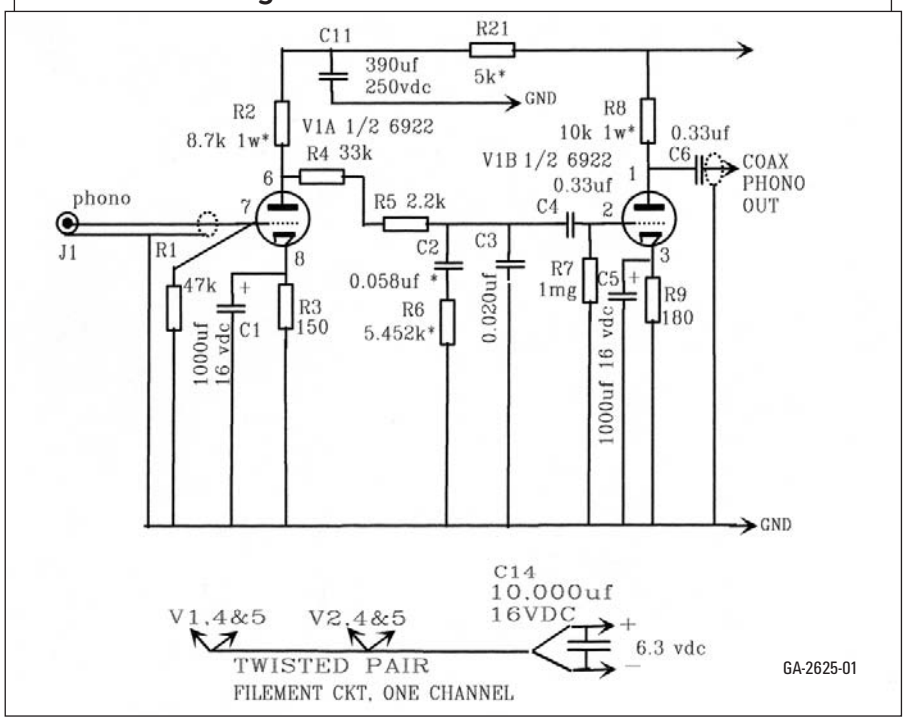

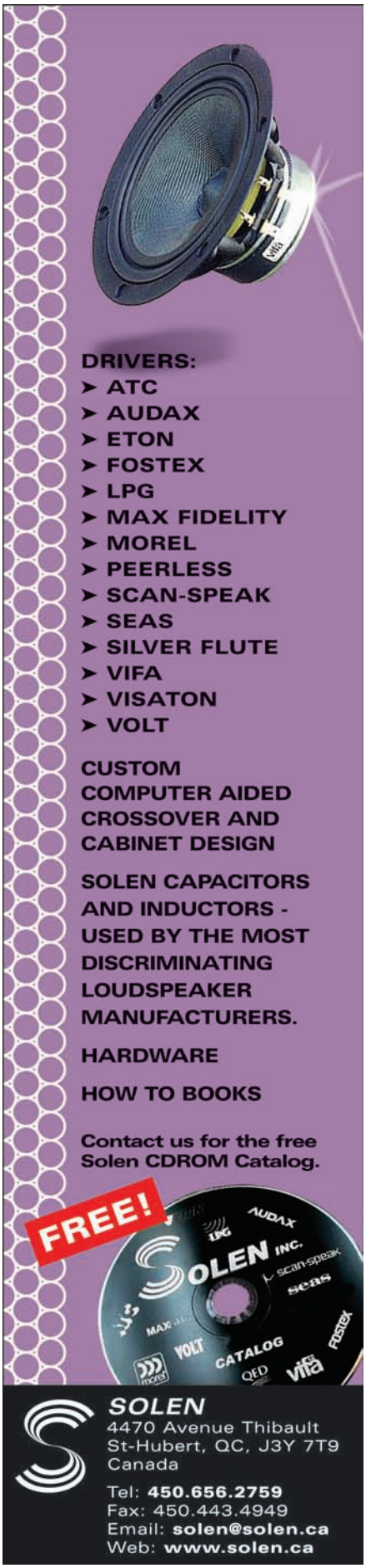

the operating point at a gm of 10,000µS and an rp of 3275Ω. The output impedance is 2467Ω with a resulting gain of 24.7. The overall gain of the phono stage at 1kHz is 35dB. The output of the phono stage is coupled via C6 to a 250kΩ level control, R13, then to the selector switch.

LINE STAGE

V2A, the first line stage amplifier (**Fig. 2**), is identical to V1B except for a small change in the cathode self-bias resistor. The small signal parameters as well as the gain are the same. The input to V2A is via a coaxial cable from the selector switch. The cable shield is grounded at the tube end only.

The output of V2A is coupled through C7, then to the channel volume control using a twisted pair. The wiper of the volume control goes to C9 and then to the grid of cathode follower V2B, which is set to operate with a Ik of 7.9mA and an output impedance of about 120Ω. The 7.9mA Ik ensures a stable value of rp and low output impedance sufficient to drive loads down to several kilohms without strain. The output is coupled through a 2.2µF capacitor, C10. R20 provides a bleed path when the unit is operated without a load.

INPUT, LEVEL CONTROLS, AND SELECTOR SWITCH

All RCA jacks are of the insulated variety (**Fig. 1**). The phono input, J1, connects directly to the grid of V1A through a coaxial cable; the cable shield goes to the shield side of the RCA jack and to the cathode ground of V1A. The CD and aux inputs are connected to their respective level controls, R11, R12, and R13, via twisted pairs. The low sides of R11, R12, and R13 are connected together by a ground bus (**Fig. 4**). The lead from the jack shields goes to the ground bus next to the corresponding level control, and the lead from the center conductor goes to the high side of the level control.

A twisted pair joins each level control center tap to the corresponding selector switch position; the ground side of each twisted pair is connected to the ground bus next to the level control only—they are not carried through the selector switch—this includes the center tap of the phono level control R10 (**Fig. 2**). A grounding lead connects to each ground bus between R11 and R12 and to the corresponding cathode ground of V2A. The phono output from V1B goes to the phono level control, R10, via a coaxial cable, the shield is connected to the cathode ground of V1B and the low side of the level control. The ground bus between V1 and V2 will provide a single path ground for the phono signal. The left and right channel outputs of the selector switch are connected via coaxial cable to the grids of the left and right channel V2A; the shields are connected to the cathode grounds of V2A (**Fig. 4**).

FIGURE 2: Line stage schematic.

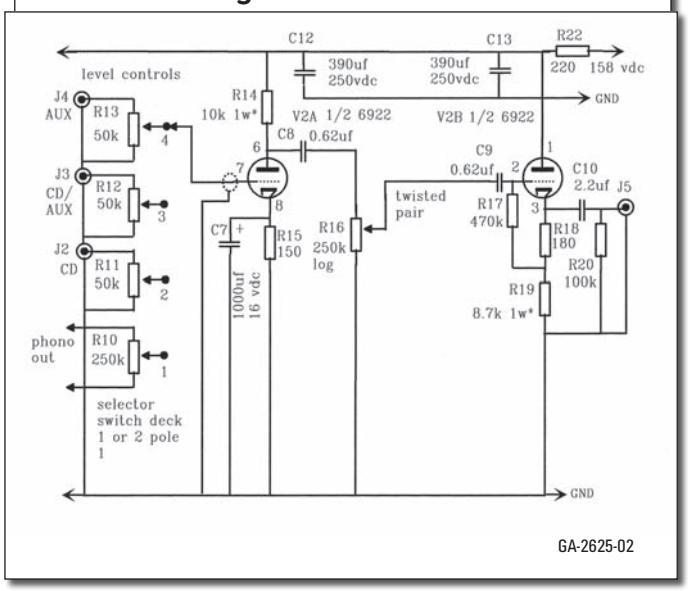

POWER SUPPLY AND DC DISTRIBUTION

The power supply (**Fig. 3**) uses a 6X4 full-wave vacuum tube rectifier to develop the plate voltage for the preamplifier. R1, 47Ω, combined with the DC resistance of the secondary, prevents hot switching and limits peak currents that could occur during the initial charging of the 390µF

capacitance of C1. R2 and C2 provides additional filtering and reduces the DC voltage to 158V DC.

R3 and R4 divide the 158V DC to 16V DC and provide a positive bias to the filament supply, preventing filament to cathode leakage in the low-level circuits. A 6′ long twisted pair connects the 158V DC to the preamplifier chassis, where it splits into separate left and right channel supplies. R22, 220Ω, C12 and C13 give channel isolation and filtering for V1B and V2. R21, 5kΩ and C11 reduce the supply voltage to 118V DC for V1A and provide filtering and isolation from the higher level circuits.

A full-wave bridge, D1, rectifies the 6.3V AC. R1 limits the output current of the rectifier and sets the DC to 6.3V DC as measured across the tube filaments. C3, 10,000µF, is for the initial filtering.

The filament line is then split into two paths, one for each channel. C4 and C5 provide filtering for each channel. Two 6′, 20 gauge twisted pairs carry the filament current to the preamplifier, where each channel receives an additional 10,000µF filtering capacitor, C14.

Control and protection is provided by the S1 on-off switch and F1, a ¾A fuse. C6, 0.033µF 600V DC capacitor, filters conducted RFI from the mains.

The transformer used is a Triad R-

FIGURE 3: Power supply schematic.

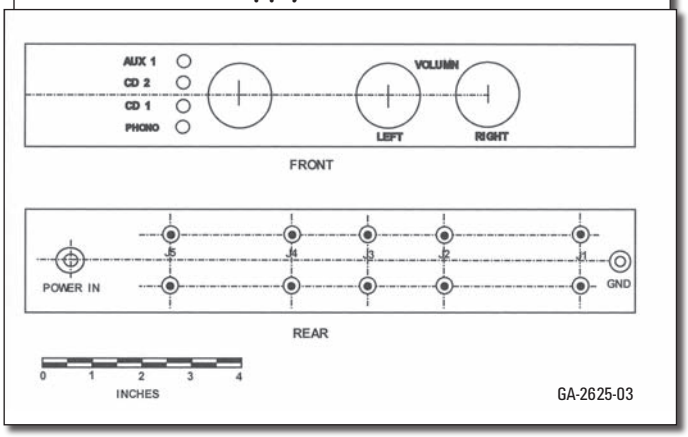

FIGURE 4: Main chassis parts placement, bottom view.

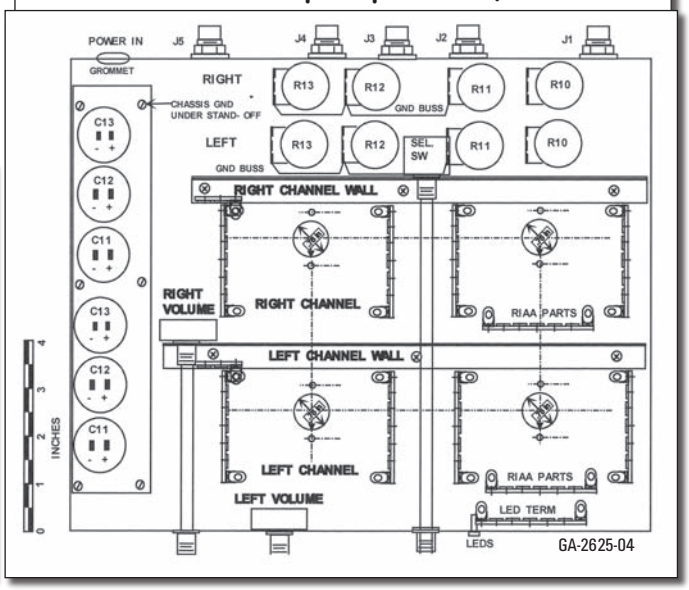

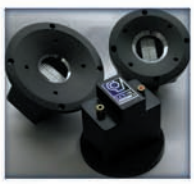
LCY tweeters

E-Speakers.com
Very High End Components and Kits

van den Hul®

Supreme Tweeter
Ribbon Tweeter is the best among all tweeters
LCY is the best of all Ribbon Tweeters

LCY-100K
Black Aluminium Casing and Stand

CLIO win

ClarityCap

AURUM CANTUS

Manufacturer: YING TAI TRADING CO., LTD.
Director and Chiefdesigner: Lau Chin Yin
Rm. B, 1/F, Houston Court, 214-216, Aplin St., Sham Shui Po, Kowloon, Hong Kong
Tel: 852-23615152 Fax: 852-23615196 E-mail: info@yingtaihk.com

Frequency Response: 7K-100KHz (-18dB/oct crossover inside)
Crossover Fc: 10KHz/96dB/2.83V/1M (300W)
13KHz/92dB/2.83V/1M (300W)
Impedance: 8 ohm / 12 ohm Ribbon Size: 15 x 25 x 0.006mm

22A, which is no longer produced by Triad, but can be found at auctions or swap meets or for a hefty price at onlinecomponents.com. The original design included a 155V DC source. Hammond has a 369BX transformer that supplies 150-0-150V AC at 75mA and 6.3V AC at 2A that will work fine with a separate 6.3V AC transformer for the rectifier filament. If you use the 369BX, change power supply R2 to a 110Ω 1W resistor. Change the left and right channel R22 to 110Ω on the main chassis filter assembly.

RESULTS

Hum and noise with the inputs open:

Line stages	90dB below 2.5V RMS output
Phono	80dB below 5mV RMS input

RIAA equalization:
Within 0.25dB 20Hz to 20kHz

Frequency response, line stage:
-0.5dB at 10Hz –1.0dB at 500kHz
Distortion, volume controls at maximum output level controlled by signal level

Distortion products predominantly second harmonic (**Photo 3**)

Line Stage

Output	20Hz	1kHz	10kHz	20kHz
0.25V RMS	0.07%	0.067%	0.06%	0.06%
0.5V RMS	0.13%	0.105%	0.105%	0.105%
1.0V RMS	0.26%	0.23%	0.22%	0.21%
2.0V RMS	0.52%	0.46%	0.43%	0.42%

Phono

Output	20Hz	1kHz	10kHz	20kHz
0.25V RMS	0.15%	0.11%	0.105%	0.105%
0.5V RMS	0.13%	0.12%	0.15%	0.15%
1.0V RMS	0.175%	0.175%	0.175%	0.175%
2.0V RMS	0.35%	0.34%	0.33%	0.34%

PHOTO 2: Rear view, main chassis.

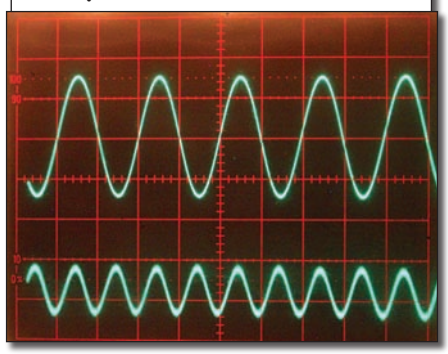

PHOTO 3: Distortion products, 1V RMS output. *Upper trace*: 1kHz preamplifier output. *Lower trace*: 0.23% distortion component, primarily second harmonic.

I measured the distortion with a Sound Technology 1700A Distortion Measurement System. Residual distortion of the unit was 0.002% or less at all test frequencies. Of note is the reduction of distortion at levels above 0.5V RMS in the phono position. This is due to the cancellation of even harmonic products generated in V1B and V2A. It actually occurs at the lower levels also, but the effect is overpowered by the boost of low-frequency noise due to the RIAA compensation.

MAIN CHASSIS CONSTRUCTION

I started by covering the front top and rear sides of the chassis with masking tape to provide a surface to transfer drill locations for parts mounting and protection of the finish. Use **Photo 4**, **Figs. 4–7**, and actual parts to determine locations. Note that the arrow on the tube sockets (**Fig. 4**) represents the gap between pins 1 and 9. At this time I built up the walls (**Fig. 6**) to ensure that the mounting holes for the selector switch and the right volume controls and the corresponding front panel bushing mounting holes were aligned.

FIGURE 5: Front and rear panel layout.

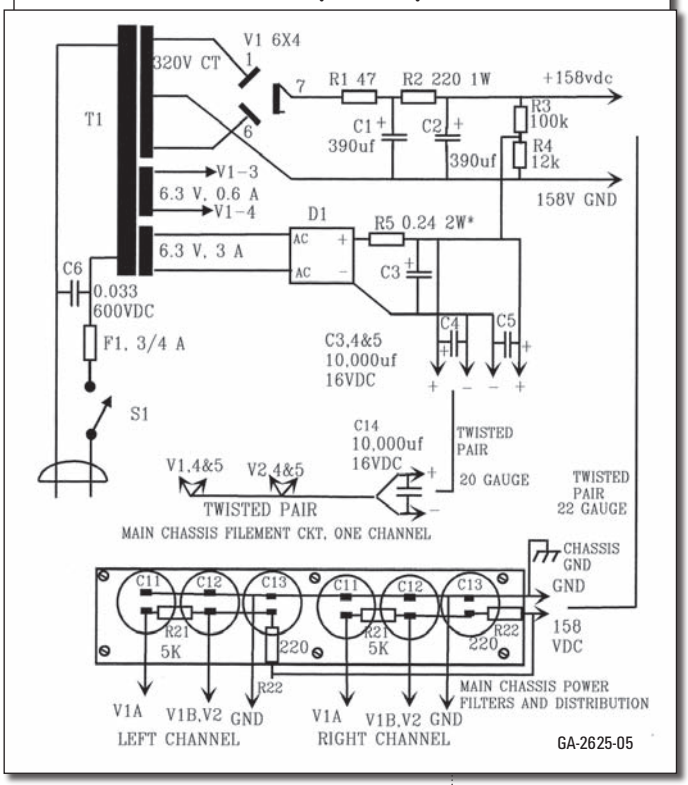

FIGURE 6: Right and left channel walls detail.

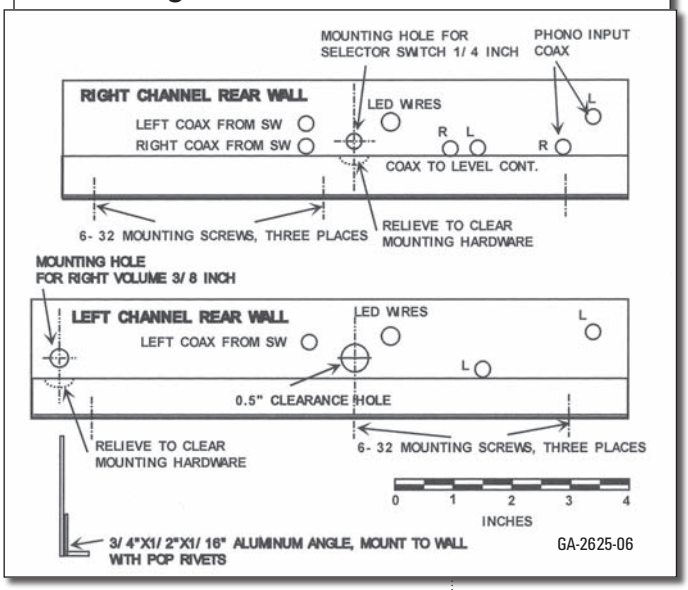

FIGURE 7: Filter capacitors mounting detail.

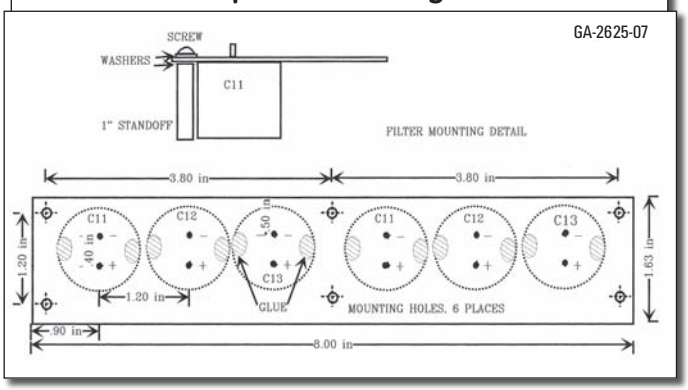

MCap® RXF by MUNDORF

THE NEXT GENERATION CAPACITORS

MCap® RXF (Radial Xtra Flat)

Optimized Winding Geometry
Extremely short, low-loss signal transmission
Extremely reduced residual-resistance (ESR)
Considerable low residual-inductivity (ESL)
Polypropylene capacitor-foil, alu metallized
Massive connection plate
Best value for money

- **MCap® Supreme Silver/Gold** - Please visit www.humblehome madehifi.com and find "The Great Capacitor Test" featuring a listening comparison of more than 20 caps. Amongst the Top Five: MCap® Supreme Silver/Gold, MCap® Supreme Silver/Oil, MCap® Supreme!
- **TubeCap** - as compact as an electrolytic capacitor, as fast and voltage-proof as a film capacitor. Due to its considerable low ESR and lower residual inductivity the TubeCap contributes to a finer, livelier sound. Advanced no drying out and self-healing properties.
- **MLytic HV** - electrolytic capacitor with the latest technology and best characteristics. Following many classic designs, these capacitors are offered as double capacity and are perfectly suitable for repair and upgrading.
- **MLytic Audio Grade** - compact electrolytic capacitor providing remarkable low ESR and ESL values as well a low inner-sound developement.

More audiophile innovations on
www.mundorf.com

info@mundorf.com
OEM and dealer inquiries invited

Recommended US Dealer
MADISOUND SPEAKER COMPONENTS
www.madisound.com

Exclusive Canadian Distributor
AUDIYO INC.
www.audiyo.com

Exclusive Australian Distributor
SOUNDLABS GROUP PTY LTM
www.soundlabsgroup.com.au

Cut a 1⅝″ by 8″ strip of perfboard for filter capacitor mounting. Locate the six mounting holes for the 6-32 screws as shown in **Fig. 7**. Drill the mounting holes and transfer the locations to the chassis top. Locate the holes for the capacitor terminals per **Fig. 7** and drill the holes out to 1/16″; note that all hole locations will line up with the board perforations.

Following is a list of drill sizes for the various chassis holes:

All mounting screws are 6-32, use ⅛″ drill

Front panel
Bushings and left volume control, ⅜″ drill.
LEDs, 3/16″ drill

Rear panel
J1 through J5, ⅜″ drill
Power in grommet, 5/16″ drill
Phono ground, 3/32″ drill

Top
Level controls, R10 through R13, 9/32″ drill
tube sockets, ¾″ chassis punch

WALLS

The mounting holes and switch shaft clearance hole are marked. Use a ⅛″ drill for the 6-32 mounting screws and a 5/16″ drill for the remainder. Transfer the mounting screw locations to the chassis top.

After drilling and punching all of the holes, mount the chassis hardware using **Photo 4** and **Fig. 4** as guides. Scrape the paint off the inside surface at the phono ground. Do not mount the walls or the RIAA terminal strips at this time. Note that I used turret sockets, but much of the wiring is similar.

Start the wiring by twisting together two 6′ lengths of 22-gauge stranded wire—red and black or your favorite colors. Use about 2′ for the filament wiring and the rest for the input jacks to level controls and level controls to selector switch and volume control wiring. I generally start by wiring the filaments. After that, proceed to the input wiring.

Strip two pieces of solid 20 gauge for the ground buses on R11, 12, and 13, and install as shown. Next, wire the left high-level inputs to the corresponding left level controls. Then do the same for the right high-level inputs.

Then, prepare the coax cables for the phono inputs, phono outputs to the phono level control, phono level control to selector switch, and the selector switch to V2 pin 7, both channels. Cut so that there is at least 1½″ of slack on each lead. The phono input will require shield ground leads at both ends, while the remainder will require ground leads only at one end.

Prep the ends by removing about ⅜″ of the outer cover. For the leaded ends, open up the braid, twist it, and tine the braid. Remove the braid on the ends without ground leads. Strip about ⅛″ of the inner insulator and tin the center conductor.

Attach and solder 2″ of 22-gauge stranded wire to the ends requiring ground leads and cover all ends with shrink sleeving, leaving the last 3/16″ of the center conductor and insulator exposed. Connect the phono input coaxes to J1 left and right. Connect the coax to the high and low sides of R10, both channels. Next, pre-wire the selector switch (see **Figs. 2**, **10**, **11**, and **Photo 4**). The right channel inputs go to deck 2, left side with pole 1 being the output.

The phono coax that connects to the center of R10 goes to position 1. Cut three pieces of the twisted pair about 3″ long. Cut the ground side back about ¼″, remove about ⅛″ of the insulation from the hot lead, and then tin the conductor. Attach these to positions 2, 3, and 4 of deck 2.

Attach the output coax that goes to the right channel V2 pin 7 to pole 1, using the end without the ground lead. Repeat for the left channel using deck 1. Cut a foot-long piece of red 22-gauge stranded and connect one end to deck 2, pole 2. This will supply +6.3V DC to the LEDs through the selector switch.

Now you will need four pieces of 24 gauge or so cut in 1′ lengths, preferably a different color for each. Attach these to terminals 1, 2, 3, and 4 of deck 2, pole 2 side and to the positive side of the LEDs on the LED terminal strip.

I used a bit of intercom four-conductor ribbon—a broken telephone extension

FIGURE 8: V1 and V2 parts layout.

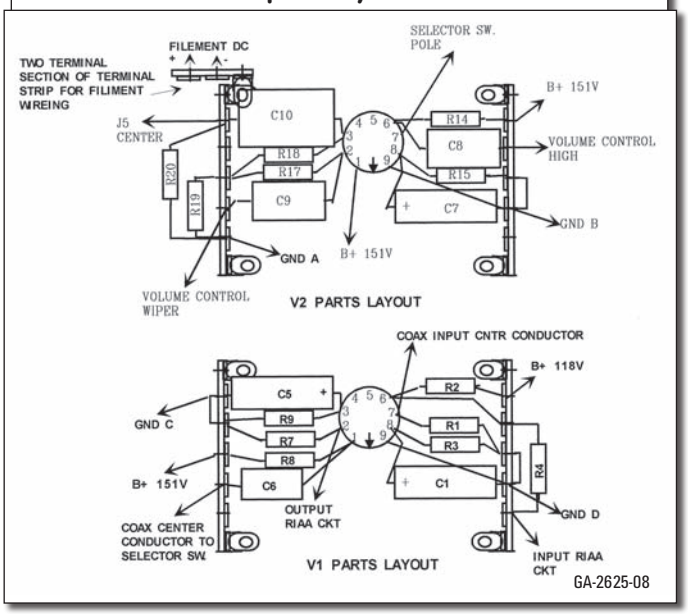

FIGURE 9: RIAA assembly parts layout.

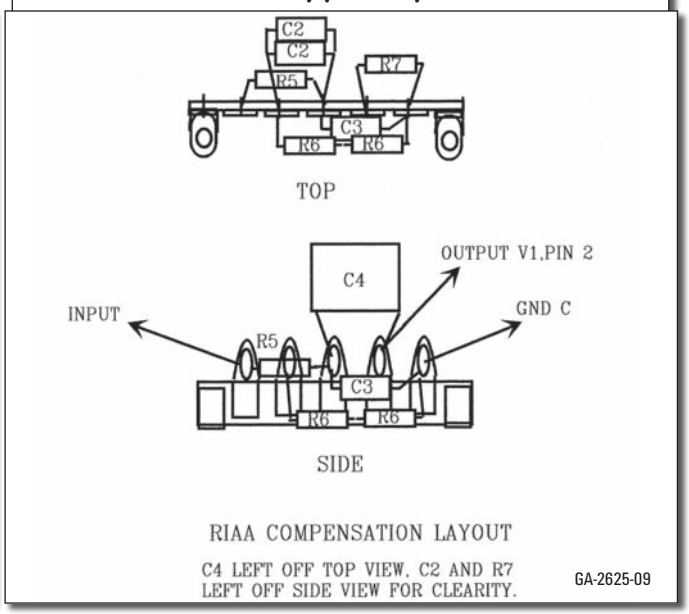

cord or individual wires would serve as well. Mount the right channel wall to the chassis. Feed the leads going to the right and left channels through the appropriate holes and mount the selector switch to the wall. Hook up the switch to level control wipers and ground, and switch position 1 to R10, 2 to R11, 3 to R12, and position 4 to R13. Trim the twisted pairs to length as required.

Connect a 6″ piece of 22-gauge black stranded to the right ground bus between R11 and R12 and a 10″ piece to the left ground bus. Feed the right lead through the hole with the right channel coax from deck 2, pole 1 of the switch, with the left lead going through the left hole. Mount the left channel wall.

Refer to **Figs. 1** and **8** for parts location and identification for right channel V1. Connect the phono input and R1 to pin 7 first, then proceed with the rest of the parts as shown in **Figs. 2** and **8**. Note that R2 consists of two 17.4kΩ resistors in parallel, while R8 has two 20kΩ resistors in parallel. Complete wiring shown in **Fig. 8** by hooking up

PHOTO 4: Main chassis construction and location detail.

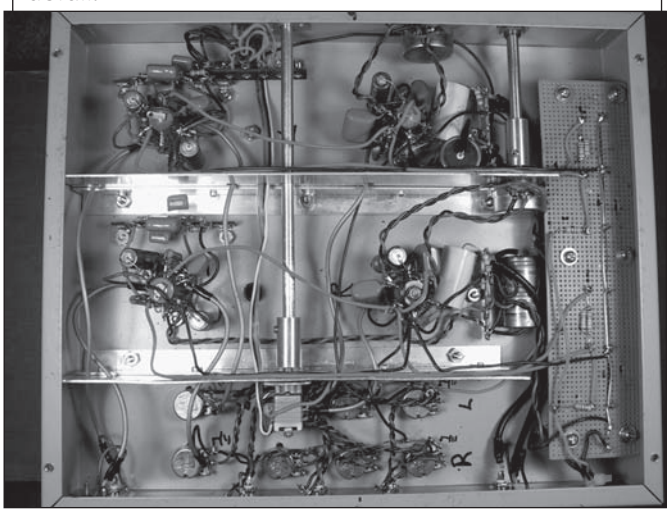

FIGURE 10: LED wiring.

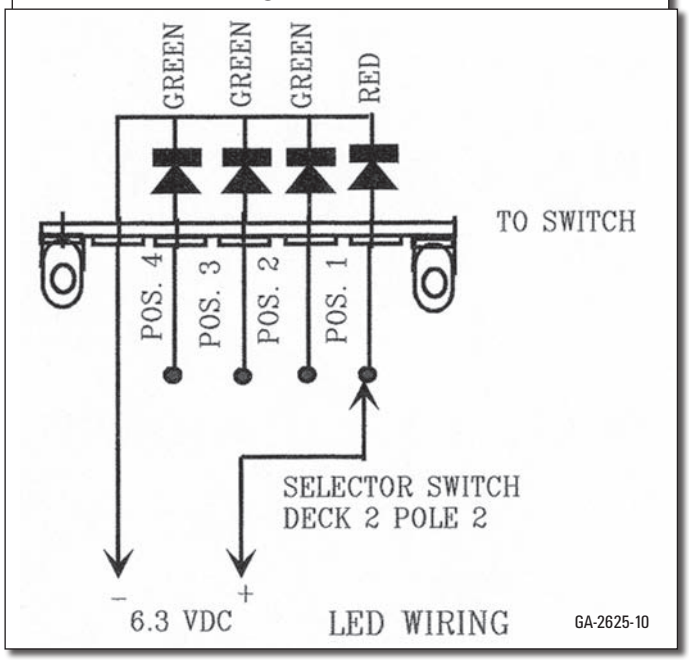

Dyna(tm) ***Clone Transformers***...world's most popular and fastest selling Dynaco(tm) replica transformers, priced competitively with generic massmarket transformers! Used by hobbyists, repairpersons and OEM's worldwide. Made in America's heartland by transformer professionals with over 50 years experience making private label and OEM transformers.

Dyna Clone output transformers are dimensionally identical and wound the same as the originals, with the same number of turns, sections and wire size, using the same patented Dynaco winding method, and made on the same core size and material. All have the requisite ultralinear screen taps.

Dyna Clone power transformers use improved insulation technology and 100% solids resin (no dripping wax!) impregnating to provide transformers that run cooler & quieter than the originals. Bolt in replacement installation, no cutting or drilling.

See and read more at *www.triodeelectronics.com*

Dyna Clone Power Transformers

PA211 Upgrade and Replacement transformer for Dynaco PAS2, PAS3 and PAS3X preamplifiers.

PA522 International export version of PA211 with "universal" 120/240V 50/60 Hz primary.

PA774 Upgrade and Replacement for ST35 and SCA35

PA060S Improved replacement power transformer for ST70

PA135 replacement power transformer for Dynaco (tm) Mark 4.

P782S replacement power transformer for Mark 3 and Mark 2

C354 Exact replacement for chokes in ST70, Mk2, Mk3 and Mk4

Dyna Clone Output Transformers..compare price, quality, weight & specs to comparably priced mass market transformers. Why settle for generic when you can have a classic?

Z56548 Reproduction of the Z565 output transformer as used on the ST35 and SCA35 amplifiers, except that the output taps are**4 and 8 ohms**

A470S reproduction of the Dynaco A470 output transformer as used on the Dynaco (tm) ST70 and MkIV amplifiers

A431S a reproduction of the Dynaco A431 output transformer as used on the MkII and MkIII amplifiers and Sunn guitar/bass amplifiers.

Other stuff we sell: Tubes, Sockets, Other upgrade/replacement Parts.

the coax from the high side of R10 to C6 and ground. Connect V1 pin 9 to ground.

Refer to **Figs. 1** and **9** to build up the RIAA circuits. Note that C2 consists of a 0.036mF capacitor paralleled with a 0.022mF capacitor and R6 includes a 5.1kΩ resistor in series with a 360Ω resistor. Build a circuit for each channel at the same time to ensure that they are as identical as possible. Mount and connect the right-channel circuit.

Referring to **Figs. 2** and **8**, build up the circuitry for V2, and connect the coax from the switch first. The center conductor goes to pin 7 and the ground lead to the ground for R15. Connect the right-channel ground lead from the ground bus between R11 and R12 to the same ground.

Complete the circuitry as shown in **Fig. 8**. Note that R14 consists of two 20kΩ, ½W resistors in parallel and R19 includes two 17.4kΩ, ½W resistors in parallel. Using 20-gauge black stranded, construct the ground bus by joining the leads between ground points A, B, C, and D as shown in **Fig. 8**. The ground from the right channel B+ filters goes to ground A.

Using 22-gauge red stranded, connect the +165V DC points listed in **Fig. 8** together starting at V2 pin 1, then to the high side of R14 and ending at the high side of R8. The +165V DC from the filter connects to V2, pin 1. Repeat the process for the left channel.

To simplify wiring, connect the LEDs per **Fig. 10** prior to installing the RIAA circuits. Connect the -6.3V lead from the LEDs to the negative terminal for the left-channel filaments and the red lead from the switch, pole 2 of deck 2, to the positive terminal. Finish the left-channel wiring.

Refer to **Fig. 7** and mount the filter capacitors to the perfboard, applying a drop of glue to opposite sides of the capacitor and push the terminals through the enlarged holes with the negative terminal next to the edge as shown. It takes about 45 minutes for the glue to set. Mount the standoffs as shown in **Fig. 7**, using two washers on each screw as shown.

Refer to **Fig. 4** and scrape the paint free from around the mounting hole that will also be used for the chassis ground. Prep a 3.5″ length of black 22 gauge stranded by soldering a spade lug to one end; this will be the chassis ground lead. Mount the filter assembly to the chassis with the ground lead lug under the standoff shown in **Fig. 4**.

Refer to **Photo 4** and **Fig. 3** to wire the filter assembly. Use a length of solid 20 gauge for the ground bus. Lace the end nearest the rear down through a hole in the perfboard and back up through the next hole to form a circle about ⅛″ or so in diameter. Do the same with the free ends of the resistors. This secures the leads to the board and makes convenient solder lugs.

Note that the 5kΩ resistors, R21 for each channel, are two 10kΩ ½W resistors in parallel. Build up the umbilical power cord with two twisted pairs of 20 gauge stranded—I used black and green for filaments—and one twisted pair of 22 gauge, black and red for B+, about 6′ long.

Use 1″ lengths of shrink tubing spaced about every foot or tape wraps to maintain the integrity of the cord. Feed one end of the cord through the grommet (see **Photo 4** and **Fig. 4**), cut the filament lines and B+ lines to length and solder in place along with the filament filter capacitors, C14. Mount the capacitors so they rest along the right and left walls and hold in place with a bead of glue.

Connect the left and right power grounds and the left and right +151V DC and +1118V DC lines to complete the main chassis wiring. I ran the power and ground lines along the walls and held them in place with beads of glue. Use a nylon tie around the cord at the grommet for strain relief.

Cut the shaft extensions so that they extend the same length from the front panel as the left volume control shaft. The coupler for the switch shaft will need a bushing to step the shaft size down to ⅛″ at the switch end. Cut a ⅜″ length off a 6-32 standoff.

Drill the threads out with a ⅛″ drill, then locate the center of the ⅜″ length and drill a ⅛″ hole in the wall. This will allow the coupler set screw to engage the switch shaft. Line up the hole in the bushing with the coupler set screw and slide it into the coupler, turn the set screw in a few turns to prevent the bushing from moving, and slide it onto the switch shaft and tighten the set screw. Install the

FIGURE 11: Selector switch details.

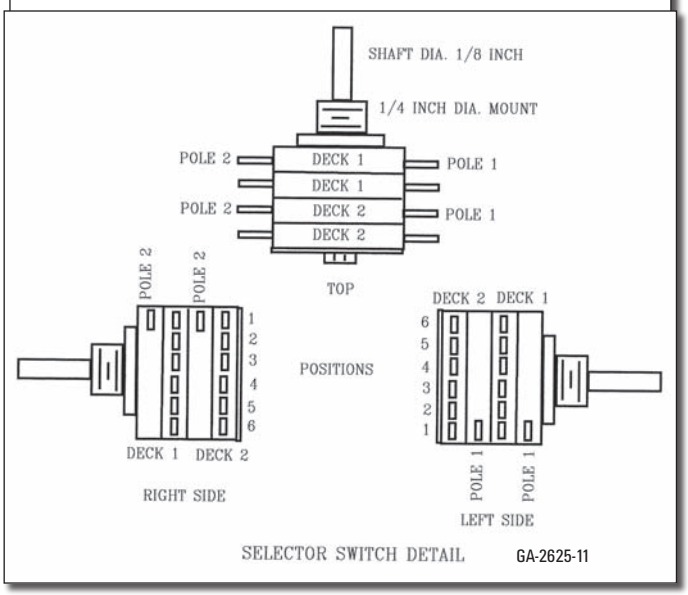

FIGURE 12: Power supply parts layout.

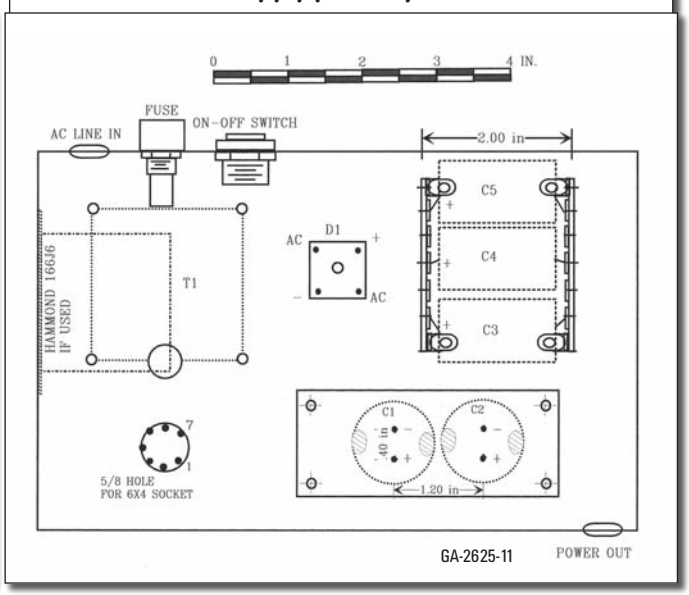

extension shafts and knobs to finish the main chassis.

POWER SUPPLY

The power supply is constructed in a similar manner as the main chassis. Use **Photo 5** and **Figs. 3** and **12** to determine part location and type. The filter assembly for C1 and C2 is a smaller version of the one in the main chassis. After completing the mechanical assembly, proceed with the wiring by referring to **Photo 5** and **Fig. 3**.

Note that R5, 0.24Ω 2W, contains two 0.47Ω 1W resistors in parallel. Install only one of these now so that there is 0.47Ω in series with the filter capacitors; you may install the second after initial test. Complete the power-supply wiring and install the free end of the umbilical power cord and use a nylon cable tie for a strain relief.

PHOTO 5: Power supply construction and parts location detail.

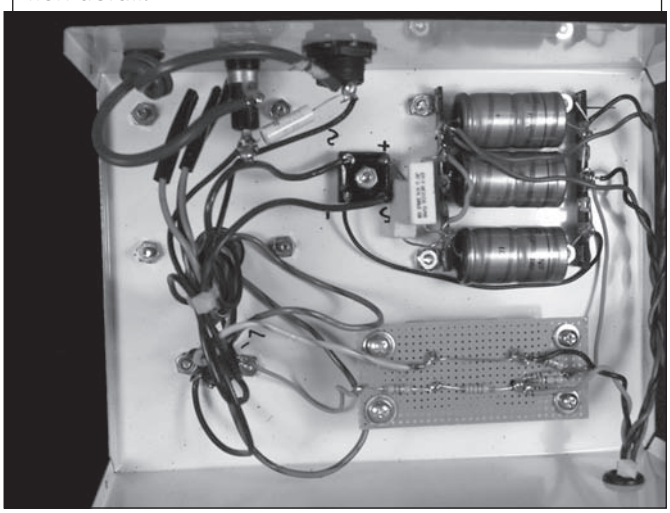

TESTING

Carefully check for cold or marginal solder joints, especially those with three or more connections. Check for power and ground continuity. Inspect each tube section for plate to power resistance, equal to the plate loads, grid to ground and cathode to ground as well as shorts between elements. If all is well, load the four 6922 tubes into the main chassis (do not install the 6 × 4 rectifier in the power supply).

Monitor the filament voltage at the C3 side of R5 and turn the power supply on. The DC voltage should slowly rise toward 6.3V DC. If the voltage exceeds 6.4V DC, turn the supply off and install a 0.47Ω 1W resistor between C3 and C4 and repeat the preceding. A 0.47Ω resistor will drop about 0.56V DC in this application and the parallel combination of 0.24Ω will drop about 0.24V DC.

Use these figures to adjust the output to 6.15 to 6.3V DC. If the initial voltage was low, parallel R5 to adjust the voltage. I am running mine at 6.18V DC. With the filament voltage set, note which one of the selector switch LEDs is lit, depending upon the selector switch setting. Check that each of the four positions is correct. These LEDs also indicate the power-supply on-off function.

Install the 6 × 4 in the power supply and turn the power supply on; the voltage at C2 in the supply should rise to around 158V DC. If so, check the 151V DC lines to each channel. They

should stabilize near 151V DC and there should be less than 5V DC difference between channels; the same is true for the 118V DC lines. Use the following table to affirm correct operation of each stage. Allow the unit to warm up for five minutes before measurement.

Operating voltages

Pin #	V1 voltage	V2 voltage
1	76.8	151
2	0.0	68.7
3	1.2	70.2
6	61	72.6
7	0.0	0.0
8	1.0	1.1

I took the above voltages on my unit using NOS JAN Philips 6922 tubes; other quality tubes should have similar readings. The readings are power-supply dependent so that if the power supply is running low then the readings will be lower than recorded.

SETTINGS

The following adjustments are made with a signal generator set to 1kHz. The volume controls are set to maximum cw (clockwise) rotation, and the level controls should be initially set to minimum, fully ccw (counterclockwise).

Selector	input	signal generator out V RMS	adjust	J5 out V RMS
CD	J2	2.8	R11	2.5
CD/AUX	J3	2.8	R12	2.5
AUX	J4	1.4*	R13	2.5
Phono	J1	5mv	R10	1.0

**For std. line output, 0.707V or the maximum output of the device being used.*

The maximum output for most CD, SACD, and DVD Audio players is 2.8V RMS. If your player differs, use the maximum listed output level as the input.

You can also set the level controls in the system by placing the volume controls in the one o'clock position and adjusting the level controls for a normal listening volume. There are no further specific turn-on or -off procedures required. The power-supply design eliminates turn-on or -off thumps.

HOW DOES IT SOUND?

The first audition was a pleasant surprise. It added several heaping measures of fun to my listening and exceeded my expectations. I have spent much time finding musical content that I had not heard before or at least was not aware of.

The preamp presents no indication of strain or intermingling of instruments or voice. A wide and stable soundstage is formed with stable location of instruments in the stage width, depth, and height. The sonic transparency allows you to follow background instruments through passages that are 20 to 40dB or so louder than the background instrument. SACDs, especially the good ones, are presented in a manner that exemplifies the sonic advantages of the format.

For vinyl I use an old but good Supex 900 MC cartridge and a step-up transformer with a cartridge load of 80Ω. The vinyl presentation is superb with detail and transparency that puts the fun back into vinyl. Yes, good vinyl does present better than SACD.

Our club had a preamp shoot-out in which this preamp was compared to the following equipment:

Audible Illusions Modules 3 with the John Curl mc board
Dynaco (Panor) Pas 4 tube preamp
Adcom AP110
Supratek Cortese

Audible Illusions—very close. Possibly less dynamics and a small limit on the high-frequency presentation. Note: the John Curl stage takes a bit of work to adjust cartridge loads.

Dynaco—Close. Somewhat noisier and a bit constrained on the high end.

Adcom—No contest. Not in the same league.

Supratek—This unit had a bit of trouble driving long, 15 to 20′ cables, possibly due to the transformer output. The owner did indicate a definite liking of this preamp. aX

Test Equipment

Sound Technology 1700A Distortion Measurement System
HP 651B Test Oscillator
HP 334A Distortion Analyzer
HP 350D Attenuator Set
B&K Precision 2830 Digital Voltmeter
Hitachi V550B Dual Channel Oscilloscope, 50MHz.

Precision Acoustic Measurements Require Precision Microphones

PS9200KIT™ USD

A complete IEC and ANSI traceable Type 1 Measurement Microphone System 2 Hz to 40 kHz, 15 dBA to 160 dBSPL
***½ inch capsule *4012 Preamp *PS9200** 2 Channel PS
***AC adaptor *WS1** windscreen ***SC1** die cut storage case.
Options: 511E Calibrator; 1 & ¼ inch mics; and Gain for DRA's MLSSA and other board level products.

ACO Pacific, Inc.
2604 Read Ave. Belmont, CA 94002 USA
Tel: (650) 595-8588 FAX: (650) 591-2891
e-mail acopac@acopacific.com

ACOustics Begins With ACO™

PARTS LIST.

Component	Description
Chassis	12″ × 10″ × 2″ Hammond P-H1441-29
Cover plate	12″ × 10″ Hammond P-H1431-29
Cover plate[1]	12″ × 8″ Hammond P-H1434-22
Chassis[2]	7″ × 5″ × 2″ Hammond P-H14412
Cover plate[3]	7″ × 5″ Hammond P-H1434-12
Terminal strip	5 lug, 0 common, 13 required
Tube socket	9 pin, 4 required
Tube socket	7 pin, 1 required
Bushing[4]	¼″, 2 required
Shaft coupling	solid, 2 required
Aluminum angle	½″ × ¾″ × 1/16″, 18″ long
Aluminum rod or thick walled tubing	¼″ OD, 12″ long
Standoff	1″ 6-32 threaded, 11 required
Perf board	6″ × 8″ Radio Shack 276-1369
Knob	3 required, Radio Shack 274-403
RCA phono jack	red insulated, 5 required
RCA phono jack	white insulated, 5 required
Glue	BEACON Plex bond or similar
Screws	6-32, ⅜″ long, 70 each
Nuts	6-32, package of 100
Lock washers	6-32 70
T-1	Power transformer, Triad R-22A, 320VCT at 70mA, 6.3V AC at 600mA, 6.3V AC at 3A. See text. Alternatives are: Hammond 369BX, 350VCT at 75mA, 6.3V AC at 2A Hammond 166J6, 6.3V AC at 1A
Selector switch[5]	4 pole 2 decks, enclosed rotary switch.
On-off switch	Power supply, rocker switch
Fuse holder	Panel mount Radio Shack 270-367
Fuse	3AG, 1A
Coax cable[6]	6′ audio cable
Hook-up wire[7]	See text

RESISTORS (*All resistors 0.5W, 1% metal film unless otherwise specified*)

R1	47kΩ, 2 required
R2, R19	8.7kΩ (2 each 17.4k in parallel), 8 required
R3, R15	150Ω 4 required
R4	33kΩ 2 required
R5	2.2kΩ 2 required
R6	5.432kΩ (5.1kΩ and a 330Ω bin series), 2 sets required
R7	1.0MΩ, 2 required
R8, R14	10kΩ (2 each 20k in parallel), 8 required
R9, R18	180Ω 4 required
R10-12	50kΩ screwdriver adjust potentiometer, 16mm 6 required
R13	250kΩ screwdriver adjust potentiometer, 16mm 2 required
R15	250kΩ 10% log taper, 2W potentiometer 2 required
R17	470kΩ 2 required
R20 and power supply R3	100kΩ 5% carbon film 3 required
R21	5kΩ 5% carbon film, 1W (2 each 10kΩ in parallel) 4 required
R22	220Ω 5% carbon film, 2 required
Power supply R1	47Ω 5% carbon film
Power supply R2	220Ω 1W metal oxide
Power supply R4	12kΩ 5% carbon film
Power supply R5	0.47Ω 1W metal oxide 2 required

CAPACITORS

C1, C5, C7	1000μF 16V DC electrolytic 6 required
C2	0.058μF 3% 400V DC metal polypro (0.036μF and 0.022μF in parallel) 2 sets required
C3	0.020μF 3% 630V DC metal polypro 2 required
C4, C6	0.33μF 5% 400V DC metal polypro 4 required
C8, C9	0.62μF 5% 400V DC metal polypro 4 required
C10	2.2μF 5% 400V DC metal polypro 2 required
C11-13 and power supply C1, C2	390μF 250V DC electrolytic 8 required C14 and power supply C3-5 10,000μF 16V DC electrolytic 5 required

DIODES and RECTIFIERS

Red LED	1 required Radio Shack 276-084
Green LED	3 required Radio Shack 276-085
Full wave bridge rectifier	6A, 200 vpiv

TUBES

6922 Jan Phillips 4 required
6X4 rectifier 1 required

1–Walls. 2–Power supply. 3–Power supply. 4–May be salvaged from ¼ in shaft potentiometer. 5–Mouser Electronics 690-C1 D0406N-A. 6–As thin as can be found. 7–Radio Shack is fine

Remember when it was fun to shop for surplus electronics?

It still is, at

HSC Electronic Supply

Genuine Monster Cable(TM) Dual Stereo Interconnnects - 4 color-coded gold RCA's, purple sheath, 8 ft. long. New!
HSC#80806 $24.50

Toroidal Transformer, 70VCT, 1A 100/120/220/240 inputs, 3.4" dia.
HSC#20691 $14.95

Embedded Wireless Transceiver! 2.4GHz - 200mW, 5VDC
HSC#21001 $65.00

Electrolytic Capacitor - New! 2700 uF, 450VDC
HSC#80809 $9.50

Genuine Monster Cable(TM) A/V Interconnnects - 1 video, 2 audio, RCA's, double-shielded, 8 ft. long. New!
HSC#80807 $29.50

2:1 ratio Step-down Toroidal Transformer, 6.75" dia. x 1.4" Max. 240 VAC input, 250VA
HSC#21058 $35.00

This small sample of items and many, many more are available at our website...and we are adding more all the time. Due to the nature of surplus electronics however, when they are gone, they're usually gone for good! We also have computer parts, test equipment, IC's & components, tools, kits and books...everything for the electronics hobbyist. In addition we are a factory-authorized dealer for LMB chassis boxes, Littelfuse, Xcelite tools, Weller soldering equipment, HC Protek test equipment and lots of other products useful for most electronics manufacturing, repair, and prototyping.

Tripplite PS6010-20T Outlet Strip - New! 5 ft. long, 10 receptacle, 20 A. breaker 15-ft. AC Cord with Twist-lock Plug
HSC#20794 $39.95

HSC Electronic Supply

Main Office - Mail Orders...
3500 Ryder St., Santa Clara, CA 95051
Three Retail Stores to serve you in Northern California!

Since 1964...
Silicon Valley's *favorite* place to shop for Electronics!

Order Toll-Free: 1-800-4-HALTED (442-5833)
or...ONLINE AT: *www.halted.com*

Local phones: Santa Clara 1-408-732-1573 Sacramento 1-916-338-2545 Rohnert Park 1-707-585-7344

NeoNoir: A Ported Two-Way

By Peter J. Smith

You need only rudimentary skills to build this 7″ two-way, which features new Parts Express drivers.

PHOTO 1: The completed NeoNoir two-way speaker.

When I sit down to design a speaker, I start with one of three ideas: a visual design, an audio design, or an experiment of some sort. This project was borne of the visual criteria, but came to excel in the audio realm. It is one of the easier projects I have done. This 7″ two-way incorporates newly designed Reference Series (RS) drivers from Parts Express (PE) into a prefabricated box with only basic skills needed to complete the project. The resulting sound and appearance is outstanding.

DRIVERS

Driver selection has become more complex in recent years as waves of units have flooded the market, many from Asia. While some are junk, others have real promise, so finding the roses among the thorns can be a challenge. Some of the established driver companies needed to adjust to this new market by refocusing on profit and core distribution networks, often leaving the DIY market in a tertiary position.

Over the past five years, speaker builders have lost access to many brands including Focal, Dynaudio, and Audax. To fill this void, distributors have added brands for the DIY market. One of the larger US distributors, Parts Express, has added such brands as Hi-Vi, Tang Band, and Usher. In early 2004, they introduced a new line, the Dayton Reference Series to compete with the higher-end drivers from large international manufacturers.

I was lucky enough to win a pair of the new RS180 7″ drivers at the 2004 DIY "Spring Warm Up" event in DC. Because I was busy with another project, I waited until PE introduced the matching RS tweeter in early 2005 before putting together a design. Both RS drivers look beautiful and are well made. The woofer uses a cast basket and coated black aluminum cone with black phase plug.

Like many metal-coned drivers, it has a nasty breakup mode beginning at 5kHz (**Fig. 1**), which will take a little extra crossover experience to tame. The Fs is around 44Hz, typical for a 7″ driver (**Fig. 2**). The driver has Faraday shorting rings, which suggest it should run with the big boys as far as distortion.

The tweeter has a 1⅛″ aluminum dome with ferrofluid and comes in shielded and non-shielded versions, both of which are 4Ω with Fs around 800Hz. The large dome and low Fs make this a great match for the RS180 woofer.

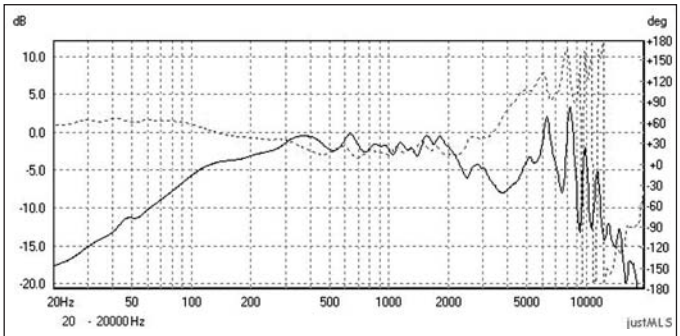

FIGURE 1: Dayton RS180S-8 woofer MLS plot full range in near field. Gated response measures 500Hz–20kHz to show cone breakup.

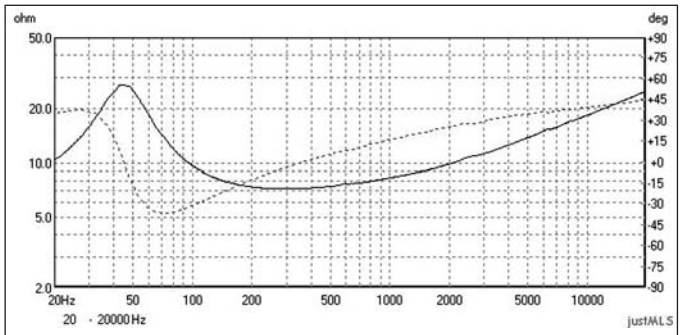

FIGURE 2: Impedance plot of Dayton RS180S-8 7″ woofer. Note the Fs is a little higher than spec, typical of production run measurements. Typically, the electromechanical parameters offset this. This will lower as the woofer breaks in.

Like the woofer, this tweeter measures a smooth response (**Fig. 3**) with some dropoff above 10kHz. The build quality of this tweeter is very high with a cast metal flange and robust dome grille.

THE CABINET

To compute cabinet size, I use a free spreadsheet program, "Unibox" (http://home20.inet.tele.dk/kou/ubmodel.html), which suggested a 20 ltr cabinet tuned to 40Hz using a 6.4cm (2.5″) by 26cm (10¼″) port. I enjoy the woodworking part of speaker building and had some pretty nice veneer stored in the garage, so I was looking forward to building these cabinets. But by coincidence, I also had a pair of PE 20 ltr prefabricated cabinets I was planning to sell to a friend as part of a kit. Because this friend was waffling on the kit, the PE cabinets were available. I decided to make this an "all PE" speaker.

I don't intend this article to be a PE love fest, but this is another area PE has really scored in the past couple of years. Their prefab cabinets are the highest quality I have seen in the prefab DIY market. The fit and finish is excellent and the price extremely reasonable. Extra baffles are available just in case you have a miscut. The black gloss and cherry versions are especially beautiful. These cabinets are made of MDF and braced reasonably well as delivered. I added additional bracing between the woofer and tweeter and on the sides, just for good measure.

The 20 ltr cabinet measures 17″ H × 10″ W × 12.5″ D. The baffle is rounded so the usable face is really about 7½″. I like to keep at least 3″ of space behind the port. The inside depth of this cabinet is too short for the port I modeled, so I needed to change ports, find a bigger cabinet, or change the tuning. Fortunately, I keep a stock of low-cost items such as adjustable ports so I don't need to order parts in the middle of a project. Doing the math in Unibox, I could move the tuning up 4Hz and leave a 2¾″ gap behind the port. That did little to other parameters, and I could keep the larger port to prevent chuffing.

So I tuned the cabinet box up to 43Hz with a 21cm (8¼″) port. I am still a little short on the 3″ back relief, but I don't dare go any higher with the tuning. I debated about putting the port on the

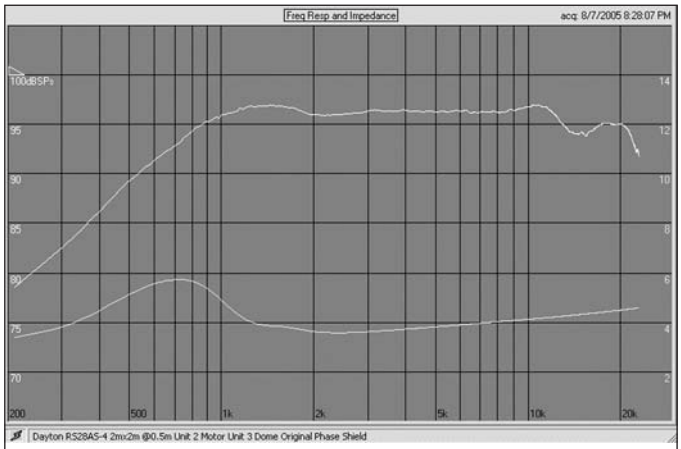

FIGURE 3: Dayton RS28AS-4 tweeter. Some rolloff in the region above 10kHz.

CLIO win 7

AUDIOMATICA news

Turns your PC into the most complete easy-to-use electrical and acoustical measurement system ....

www.cliowin.com

www.audiomatica.com

■ **CLIOwin 7**, by Audiomatica, is the new measurement software for **CLIO**. **We are proud to announce that several new features have been added to a measurement system that was already a reference.**

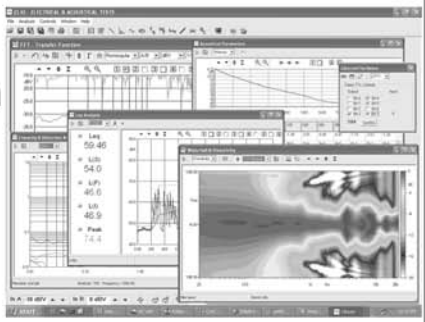

Distortion & Linearity Analysis ■
FFT Live Transfer Function ■
Color Waterfall Analysis ■
ISO 3382 Acoustical Parameters ■

NEW FEATURES!

■ **Directivity Analysis Color Map**
■ **Directivity Polar Pattern**
■ **IEC 61672 Leq Analysis**
■ **Wow & Flutter Analysis**

■ **Powerful hardware control. CLIOwin 7** fully exploits the capabilities of the SC-01 Signal Conditioner and of the QCBox Model 4 Amplifier&SwitchBox. This measuring instrument excels for signal interfacing, precision and reliability.

Two channels separate input monitor and control up to +40 dBV (280 Vpp)

Programmable AC output generator with DC voltage

Electronic Crossovers
Tube
Solid State
Passive Crossovers
Line level
Speaker level
Custom Solutions
We can customize our crossovers to your specific needs. We can add notch filters, baffle step compensation, etc....
All available as kit
Free Catalog:
Marchand Electronics Inc.
PO Box 18099
Rochester, NY 14618
Phone (585) 423 0462
FAX (585) 423 9375
info@marchandelec.com
www.marchandelec.com

front or the rear, but decided on the rear because putting it on the front would have made for a crowded baffle. I now wish I had put it on the front, because I think it is easier for room placement. The drivers have a ½″ space between them.

The PE boxes are sold in a finished state, so you must be very careful when routing holes. The current best practice is to place paper shelf liner with a slight tacky (not adhesive) backing toward the box and cut through the paper. Then peel the paper off. I place a foam mattress pad on the workbench to protect finished wood during these operations.

On this project, you cut holes for the port, woofer, and tweeter. I recess the port for looks, but that is not necessary. However, you must recess the woofer and tweeter. Use a plunge router with the Jasper jig and a ¾″ bit for the recesses and a ¼″ bit for the holes. These are the only cuts on this project if you use the baffle that comes with the cabinet. A couple of gold input terminals require only a drill—worth the extra cost because they look great and you don't need to cut a terminal plate hole or recess. PE would do well to stock baffles with precut holes for their more popular driver combinations.

Another part of this project requires the use of a Corian baffle. Corian is the plastic used in countertops and is made by Dupont. A very generous speaker-building colleague offered to cut a pair of baffles for me and I took him up on his offer for this project. Corian is brittle and difficult to work with. You will get chips, nicks, and scratches no matter how careful you are.

I glued the Corian onto an MDF slab using Liquid Nails so it fit exactly into the PE box and to provide support for the thin Corian, which I cut to fit the same baffle mounting holes in the PE box. So the whole Corian baffle is replaceable with the PE baffle if I change my mind later. Even the original grille fits into the mounting holes in the Corian. I used cap screws and hurricane nuts to fasten the drivers. I have one more set of Corian baffles already cut for the next project, but after that, I don't think it is worth it.

There are a number of options for interior damping. I have used Acousta-Stuf as well as a number of other products. My usual methodology is to use Dacron pillow stuffing from a fabric store in the upper part of the cabinet away from the port and stick-on foam near the woofer. I try very hard not to interrupt the flow from the woofer to the port.

If you have measuring equipment, you can see the effects of limiting air to the port by noting the height of the saddle on the impedance plot. This subject is covered in most speaker-building books, but I was surprised at how little interruption it takes to affect the performance. I included some sticky foam in the parts list. Place it on the sides of the cabinet behind and in back of the woofer. You might also add some wherever the cabinet sounds a little hollow on the rap test (or add more bracing).

PARTS LIST

Component	Item No.	Estimated cost	Total cost
Dayton RS180S-8 woofer (2)	295-364	$32.70	$65.40
Dayton RS28AS-4 tweeter (2)	275-135	49.45	98.90
TWC-0.75 cabinets-cherry (2)	302-732	84.72	169.44
Port tube – 2.5″ adjustable (2)	260-386	2.05	4.10
Binding posts – gold (2)	091-1245	6.88	13.76
Sonic barrier ¾″	260-530	16.56	16.56
Driver mounting screws	081-425	2.35	2.35
Inductor 1.80mH, 15ga (2)	255-428	9.96	19.92
Inductor 0.56mH, 18ga (2)	255-232	3.27	6.54
Inductor 0.33mH, 18ga (2)	255-220	2.79	5.58
Capacitor 5.1μF (2)	027-423	1.95	3.90
Capacitor 3.0μF (2)	027-418	1.67	3.34
Capacitor 0.68μF (2)	027-408	0.85	1.70
Capacitor 6.8μF (2)	027-424	2.25	4.50
Resistor 30Ω ni (2)	004-30	1.25	2.50
Resistor 3Ω ni (2)	005-3	3.50	7.00
Resistor 10Ω ni (2)	004-10	1.25	2.50
		Total	**$427.99**

For ease of ordering, I am using all parts from PE. The woofer circuit (*Fig. 7*) is mostly a second-order. The tweeter is a second-order (*Fig. 8*) with L-pad. The tweeter is *not* reversed on this configuration as the filter to kill the woofer breakup moves the drivers into phase.

THE CROSSOVER

This crossover is just a little more complex than a simple second-order. I downloaded the CLIO files from PE and manually stripped the header information so LspCAD (www.ijdata.com) could read them. LspCAD did a reasonable job of predicting response, but this speaker needed much trial and error.

There are different topologies to kill the cone breakup. I tried three or four and ended up with this version. It is close to some of the other crossovers for this driver combination, so if you don't like my crossover, you can try one of the other designs on the Internet that use a similar cabinet. I am not sure whether you call this a second-order or third-order because the second capacitor is after the filter. The acoustic rolloff is close to second-order.

Again, the idea is to start the knee to merge with the tweeter, but then produce a steep drop to kill the cone breakup. Note that I listed a 1.80mH coil as the primary woofer coil. This is one spot where it pays to spend a little extra money to get the larger gauge wire with less resistance.

While 1.80mH will work fine, you can unwind 6–10 turns to bring the value close to 1.70. This will brighten up the speaker if you prefer brighter speakers. Remember that all of the components in the speaker have tolerances, so you are not putting something terribly out of balance if your unwinding is not perfect. The impedance is a little steeper than I prefer, but it does not seem to affect the sound (**Fig. 4**).

You can add a zobel to straighten out the impedance curve if you wish. I left it off the parts list because, while it does level the impedance, it pulls the tweeter impedance down to under 4Ω, which I think a larger sin than the impedance curve. If you decide to add a zobel, use a 10Ω resistor and 24µF cap across the woofer input.

To install crossovers, cut a sheet of pegboard into 4 × 6 rectangular blanks. Then place a pearl-size drop from a hot glue gun on each of the four corners of the bottom of the blank. When this is dry, the hot glue pearls act as feet. Assemble the crossover using plastic ties and solder the connections. Put a small piece of foam under resistors to pad them under the pressure of the plastic tie. If the crossover is large and complex, use two blanks per speaker.

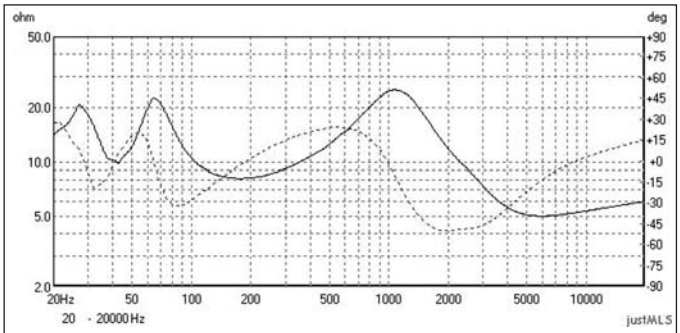

FIGURE 4: Completed speaker impedance plot. Easy to drive speaker with a drop to 5Ω up at 5kHz. A zobel circuit will smooth the impedance in the 1kHz region at the cost of dropping the upper region below 4Ω.

AVM (Anti-Vibration Magic) - DACT - Techflex - Xsymphony

AUDIYO
www.audiyo.com

Exclusive Canadian Distributor

Audiyo Inc. 10520 Yonge Street, Unit 35B - Suite# 267 - Richmond Hill, Ontario - L4C 3C7 - Phone: (647) 294-7786

To mount the crossover, simply use one screw in any hole in the center of the blank and into the speaker. As the screw tightens, it pulls the blank at the center, pressing the feet firmly against the speakers. This produces a five-point compression: four feet and the center screw. I have never had a crossover come off or even move using this technique.

MEASUREMENTS

The final measurements look very good with a flat MLS across the midband and a small dip in the upper mid. I did that on purpose to take some of the coldness out of the voice, typical of flat-voiced speakers (**Fig. 5**). The off-axis and vertical axis are typical for this configuration with little variation 15° horizontal, but like many second-order crossovers, there is a fair amount of vertical variation at the crossover point due to phase. The impedance looks good with a typical rise near the crossover. The reverse null is good with a more than 12dB drop at crossover (**Fig. 6**).

SOUND

The overall sound is detailed and gentle, with no brightness at all with solid bass. The clarity of the bass and the detail in the mids surprise me the most. My usual test tracks sound great. Duke Ellington/Louis Armstrong "Duke's Place" (*The Great Summit*) is the most revealing track in my arsenal. When this goes bad, it really goes bad.

Everything works well with the Neo-Noir. Duke is on the edge of bright with a touch of harshness, great striking

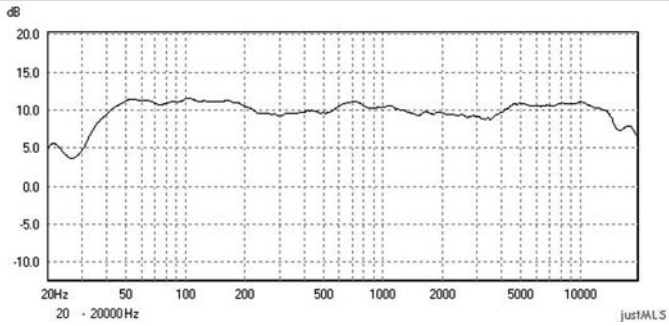

FIGURE 5: Merged MLS plot for the completed speaker. Some dropoff in the mids section to cool brightness. Port output and lower woofer range taken near field, mid/upper range at 1 meter.

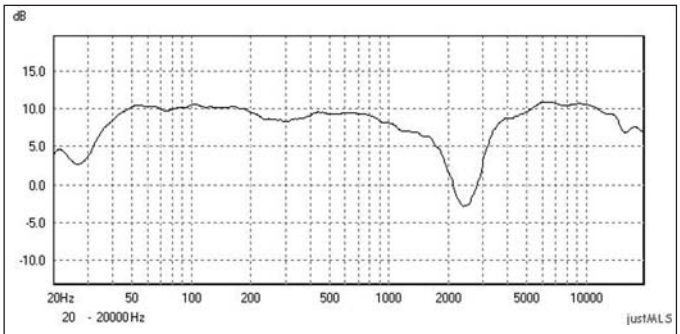

FIGURE 6: Reversed tweeter showing null in crossover section.

TLWRX VERSION 3.0

Transmission Line Software *by G.L. Augspurger, Perception, Inc.*

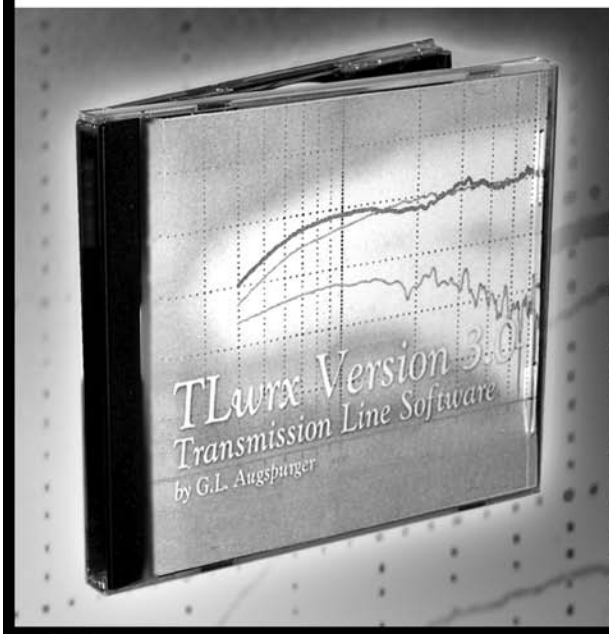

ACCURATELY PREDICT the behavior of transmission loudspeakers at the design stage with this software modeling program.

Provides valuable information about expected system response using basic performance relationships similar to Thiele/Small analysis of vented boxes.

Software based on extensive research by G.L. Augspurger, longtime technical manager for JBL's professional division and designer of over 100 custom installations in recording studios worldwide.

Along with the TLwrx Version 3.0 software, extensive notes, an alignment chart, and Augspurger's three articles describing his research from *Speaker Builder* magazine are included on the CD. 2004, CD. Sh. wt: 1 lb.

SOF-TLWRX $129.00

Old Colony Sound Laboratory PO Box 876 Peterborough NH 03458-0876 USA
Toll-free: 888-924-9465 Phone: 603-924-9464 Fax: 603-924-9467
E-mail: custserv@audioXpress.com www.audioXpress.com

To order call **1-888-924-9465**
or order online at **www.audioXpress.com**

on the piano, reedy horns, and chesty voice. The over-miked trumpet is tamed nicely. Dave Brubeck's "Take Five" also plays very well with the high hat clear, avoiding that "running water" sound. The drum is solid, the clarinet breathy. The NeoNoir pulls it off with amazing clarity for a 7″ two-way. Use this one to position the speaker for best bass.

Classical also is good with excellent separation of instruments and staging. I generally use one of the Telarc Orchestra Spectaculars. The rear port comes alive about 18″ from the back wall. Room position is important on this speaker as the bass is not elevated. Again, if I started over, I would squeeze the port onto the front. *aX*

***Peter Smith** has been an audio hobbyist for most of his life, starting in the early 70s. He has been building speakers for about six years. He runs a hobby website,* www.helarc.com, *and hosts a regional DIY speaker event every October in the Washington DC area. Look for posts under Pjay on the audio boards.*

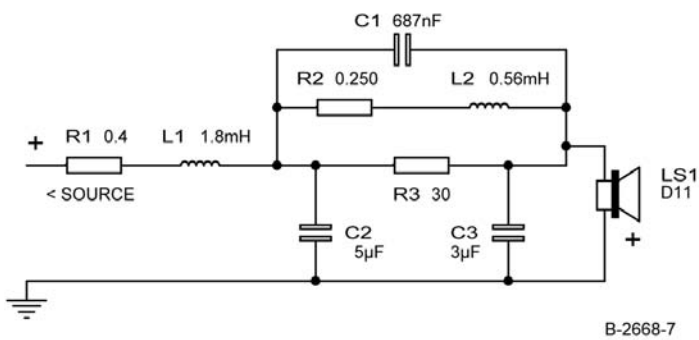

FIGURE 7: Woofer circuit. Second-order filter followed by a notch filter and then a capacitor. The goal is to produce normal second-order slope with a steeper slope in the upper region to kill the cone breakup. The final acoustic slope is almost second-order in the crossover region.

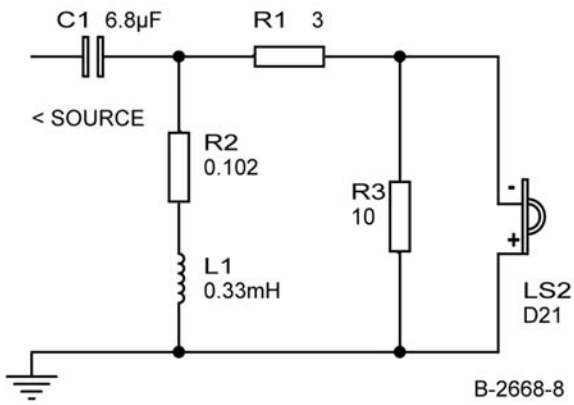

FIGURE 8: Normal second-order crossover with L-pad attenuation. The acoustic slope is also second-order. Note the tweeter is electrically in-phase with the woofer. I think this is due to the phase shift caused by the notch filter and the added capacitor in the woofer network.

Design speaker boxes with

BassBox Pro

Design speaker boxes for any space: car, truck, van, home hi-fi, home theater, pro sound, studio, stage, PA and musical instruments. Import acoustic measurements. For example, the response of a car can be imported to simulate the in-car response.

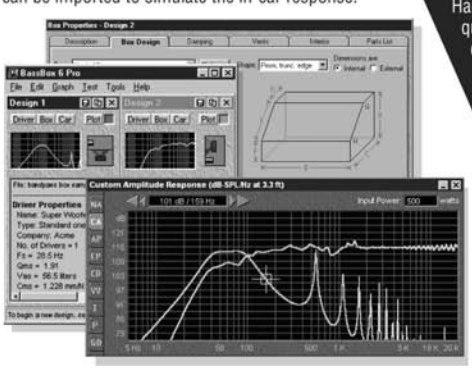

$129 plus S&H

Sophisticated Driver Modeling and Advanced Box Design

• Multiple drivers with isobaric, push-pull and bessel options. • 3 dual voice coil wiring options. • "Expert Mode" dynamically analyzes driver parameters. • Design closed, vented, bandpass and passive radiator boxes. • "Suggest" feature provides fast box design. • All box types account for leakage losses and internal absorption. • Advanced vent calculation. • Bandpass boxes can be single or double-tuned with 2 or 3 chambers. • 22 box shapes (shown below). • Open up to 10 designs at one time. • Analyze small-signal performance with: Normalized Amplitude Response, Impedance, Phase and Group Delay graphs. • Analyze large-signal performance with: Custom Amplitude Response, Max Acoustic Power, Max Electric Input Power, Cone Displacement and Vent Air Velocity graphs. • Includes a helpful "Design Wizard" for beginners.

Need help with your speaker designs?
BassBox Pro & X•over Pro can help!

HARRISTECH

Harris Tech *Pro* software for Microsoft® Windows can help you quickly create professional speaker designs. Our software is easy to use with features like "Welcome" windows, context-sensitive "balloon" help, extensive online manuals with tutorials and beautifully illustrated printed manuals. We include the *world's largest driver database* with the parameters for many thousands of drivers.

For more information please visit our internet website at:

www.ht-audio.com

Tel: 269-641-5924
Fax: 269-641-5738
sales@ht-audio.com

Harris Technologies, Inc.
P.O. Box 622
Edwardsburg, MI
49112-0622
U.S.A.

Design crossovers with

X•over Pro

Design 2-way and 3-way passive crossover networks, high-pass, band-pass or low-pass filters, impedance equalization, L-pads and series or parallel notch filters. Its Thiele-Small model provides professional results without complex testing.

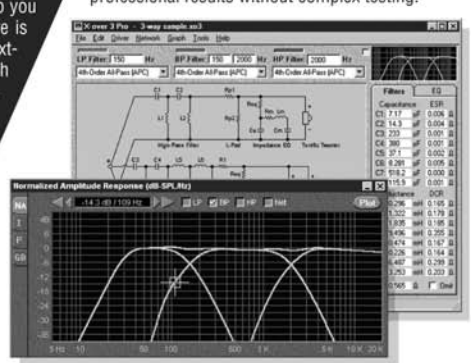

$99 plus S&H

Passive Crossover Filters and Scalable Driver Modeling

• 1st, 2nd, 3rd and 4th-order "ladder" filter topologies. • Parallel crossover topology. • 2-way crossovers offer Bessel, Butterworth, Chebychev, Gaussian, Legendre, Linear-Phase and Linkwitz-Riley filters. • 3-way crossovers offer All-Pass Crossover (APC) and Constant-Power Crossover (CPC) filters. X•over Pro's capabilities scale to fit the amount of driver data. • A crossover, filter or L-pad can be designed with just the nominal impedance of each driver. • With full Thiele-Small parameters, impedance equalization can be designed and the performance graphed. • Graphs include: Normalized Amplitude Response, Impedance, Phase & Group Delay. • Graphs can include the full speaker response including the box. • Estimate component resistance (ESR & DCR). • Calculate the resistance of parallel or series components.

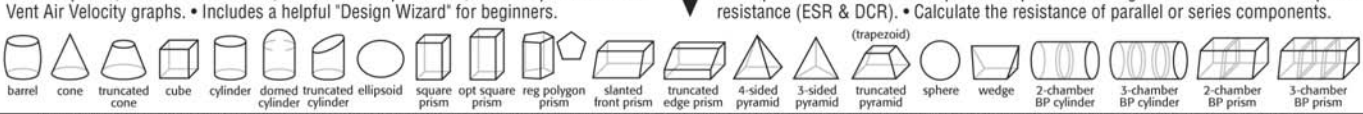

Copyright © 2002 by Harris Technologies, Inc. All rights reserved worldwide. BassBox is a trademark of Harris Tech. Other trademarks belong to their respective companies. Harris Tech reserves the right to make changes without notice. All prices are in U.S. dollars.

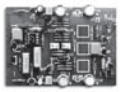

A Head Amp for Very Low Impedance Moving Coil Cartridges

Discover the "right" combination when you pair this head amplifier with a low output, low impedance cartridge.

By Paul L. Rossiter

Like so many others, I was heavily involved in evaluating a number of different amplifiers, cartridges, and speakers in the "classical" analog period of the late 1970s and early 1980s. My experience was that every now and then you came across a component or unit that just seemed "right." Others prompted a niggling desire to keep adjusting levels or tweaking some other aspect of their operation, but with the "right" components or combination of components, you tended to simply sit back and listen to the music.

This was the case with the head amplifier described here when used in combination with a Fidelity Research FR1 Mk111 moving coil cartridge (with the one exception of replacing the first stage transistors to reduce the amplifier noise even further). It continues to give rock-solid bass, beautifully detailed, three-dimensional midrange and open and effortless highs. I have not yet found a moving magnet or CD source that can equal the drama and engagement with the music.

Indeed, of the cartridges I have heard, my listening preference always tends toward cartridges from manufacturers such as Koetsu, Linn, and the high-end Ortofon range. These cartridges lie at the very low output end of the MC range where outputs are typically only 0.1–0.2mV at 5cm/sec and impedances are typically less than 10Ω. As I mentioned, my favorite remains the now-scarce Fidelity Research FR1 Mk111, which has a very low output around 90µV and impedance of 1Ω.

Having quite a low input impedance of around 8–20Ω (depending upon the actual component values used), the head amplifier described here is best suited to the very low output, low impedance cartridges from manufacturers such as Koetsu, Linn, Lyra, Ortofon (high-end), Audionote/Kondo, and collector items such as Fidelity Research. It might not give optimal performance with higher impedance cartridges (above around 10Ω), and, depending upon how high their inductance is, the low input impedance might even lead to some high-frequency loss with such units. With its low output impedance, you can, of course, use it in conjunction with either valve or semiconductor-based RIAA equalization stages.

The rest of my system comes largely from that classic period and includes:

- SME 3009 Series II tonearm with FD200 fluid damper
- ADC UH-MG1 Magnesium headshell
- Thorens TD124 Type II turntable
- RIAA equalization stage based upon the discrete op-amp design
- Three-way active crossover, triamped into a four horn system[1], the crucial mid/upper range power amp being valve (push-pull ultralinear 6L6 monoblocks) with a passive crossover to Decca-London ribbon tweeters.

MOVING COIL (MC) CARTRIDGES

Moving coil (MC) cartridges differ from their moving magnet (MM) counterparts in that their output impedance is very low, typically <50Ω, and their output voltage is similarly quite low, typically only around 0.1–0.5mV at 5cm/sec. There are higher output versions, though I have yet to find one that passed the "right" test.

While the low output voltage and impedance introduces some challenges for the following amplifier stages, there are some benefits as well. The main one is that, unlike their MM counterparts, the low source impedance is capable of driving considerable cable and input capacitance without any degradation of the signal. With MM cartridges that typically have a resistance of around 500–2kΩ in series with an inductance of 500–1000mH, the cable and input capacitance can lead to some unwanted frequency aberrations[2].

However, on the downside, with the low impedances involved, the cables and plugs must be high quality and offer the lowest possible electrical resistance. Furthermore, because the output signal of a MC cartridge may be up to 40dB below a MM (which is typically around 5mV at 5cm/sec), some form of matching to the following RIAA equalization stage is required to maintain an acceptable signal-to-noise ratio. One approach (which should not be dismissed out-of-hand) is to use a step-up transformer, though good ones tend to be quite expensive. The alternative is to use a head amplifier to provide the required 20–40dB gain, provided that it has been designed so that it doesn't degrade the noise performance or introduce any distortion products.

NOISE IN PICKUP CARTRIDGES

The major source of noise in the cartridge is Johnson noise due to thermal motion of electrons in the resistive component of its impedance[3]. The root mean thermal noise voltage Nv is then given by:

$$Nv = \sqrt{(4kTRB)} \text{ volts}$$

where

k = Boltzmann's constant (1.38×10^{-23} J/K)
B = bandwidth (Hz)
R = resistance (ohms)
T = absolute temperature (300k at room temp)

If you take B to be 20kHz (the full audio bandwidth with brick-wall cutoff) and 3Ω as the DC resistance of a typical low impedance cartridge, the thermal noise voltage is then 31.7nV.

Because of different ways of specifying bandwidth (slope of cutoff and so on), it is also common to quote the noise voltage per square root of bandwidth to give "volts per √Hertz." For the above values, this becomes 0.22nV per √Hertz. Sometimes this is measured in relation to a power of 1mW into 600Ω (i.e., 0.775V) and quoted as dBu. For this example, the 31.7nV equivalent is then –147.7dBu.

In terms of signal-to-noise, a 3Ω MC cartridge typically has an output of around 200μV at a recorded velocity of 5cm/sec, giving a S/N of 76dB with respect to that reference velocity (before RIAA equalization). The situation for a MM cartridge is more complicated due to the large inductive component of its output impedance. This means that its impedance at high frequencies is actually quite high, and most noise then comes from the preamp, which must have an input impedance of around 47kΩ to properly load the cartridge. The thermal noise voltage from such a resistor is around 3900nV—much higher than that of the cartridge itself!

A detailed analysis[4] shows that the "noise" equivalent impedance of a MM cartridge over the audio bandwidth is around 12kΩ, which appears in parallel with the 47k input resistor, giving a thermal noise of around 990nV. Taking this as the figure for a MM cartridge leads to an overall S/N of 74dB, in the same range as for MC cartridges.

These figures will be higher after RIAA equalization (and A-weighting, if used for the specification) due to their effect of decreasing the noise bandwidth. Furthermore, the relatively high inductance of MM cartridges will also modify the noise spectral density affecting the comparison[3,5,6]. For example, Self[5] calculated the S/N for a Shure M75ED (610Ω, 470mH) after RIAA equalization to be 82.8dB (ref 5mV) while Maxwell[3] determined 76.7dB for a slightly higher impedance ADC-27 cartridge (1.13kΩ, 750mH), both including the necessary 47k loading resistor. Using Maxwell's approach, the corresponding figure for the 3Ω MC cartridge after RIAA equalization is 80.1dB.

Provided you can design the head amp to keep its contribution to the noise to no more than that of the cartridge, there is little to choose between MM and MC in terms of signal-to-noise. The challenge, then, is to design a head amp with adequately low noise, high linearity, and dynamic range. However, noise is, of course, only one aspect of the transduction of the displacement of the groove into an electrical signal by the cartridge, and linearity of the magnetic circuit, effective tip mass, and other mechanical factors all contribute to the overall signal quality.

NOISE IN ACTIVE DEVICES[7,8]

There are a number of equivalent ways

www.seas.no mail@seas.no

seas
The Art of Sound Perfection

"Seas tweeters always stand out! They have a linear frequency response, low distortion and are made to tight tolerances. The sound is rich, detailed and dynamic. We like the typical, no nonsense Scandinavian look. More important may be the excellent price/quality ratio making them very competitive in today's global market"

Joachim Gerhard
Sonics by Joachim Gerhard

22TAFG
A high performance wide-range aluminum dome tweeter.
Ideal for 2 or 3-way systems.

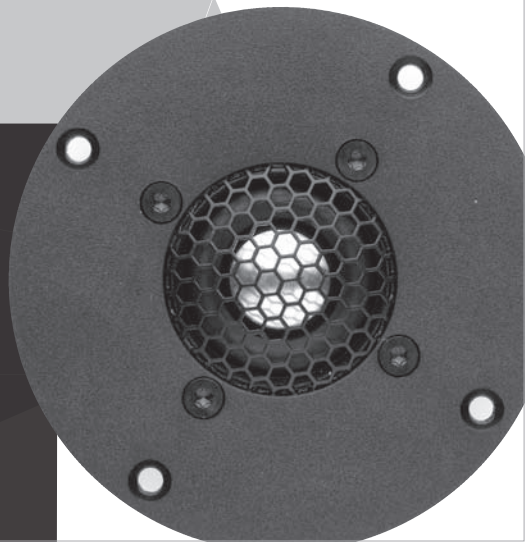

SEAS takes pride in delivering the best sound quality possible through its classic, yet innovative design. Delivering superior sound reproduction and responding to customer's needs — that's been our mission since 1950, and our quest continues.

to compare the electrical noise introduced by a head amplifier with that of a cartridge, and performance may be quoted in any of them (if it is actually quoted at all!) However, you must be cautious in comparing specs because RIAA equalization, A-weighting, and so on, will affect the figures reported. The common measures used are as follows:

Noise factor
F = total output noise power/output power caused by source
= 1 for perfect amplifier.
Noise figure
NF = 10 log F
= 0 for perfect amplifier.

A NF of 3dB means that the source and amplifier contribute equally to the noise output—a useful design target. The requirement is to design the amplifier for a minimum NF at the operating source impedance.

EQUIVALENT INPUT NOISE

The input noise voltages (normally called the "equivalent input noise," E_{in}) can be expressed as a voltage, a voltage per √Hertz or dBu, as I've said. For example, using the figures quoted for a 3Ω cartridge, an amplifier with an equivalent input noise voltage equal to that of the cartridge (i.e., 31.7nV or 0.22nV per √Hertz) would give a NF of 3dB. The S/N referenced to 5cm/s would then be around 73dB (before RIAA), depending upon the actual cartridge output.

The noise performance of a properly designed amplifier will be determined by the first amplification stage. The noise in this stage is conventionally represented by noise voltage and noise current sources (V_n and I_n, respectively) at the input of an ideal (i.e., noiseless) amplifier, as shown in **Fig. 1**.

These noise sources are functions of the various electronic processes occurring in the transistor and are influenced by junction geometry, current gain (h_{FE}), collector current, and manufacturing process.

The main contributions to the noise are:

1. Thermal (Johnson) noise, due to the base spreading resistance of the transistor, $r_{bb'}$.

This is modeled as a voltage
$Et = \sqrt{(4kTr_{bb'})}$ (volt per √Hz)

(Note that $r_{bb'}$ is not actually constant and varies somewhat in inverse proportion with collector current, I_c, up to a current where the characteristics become decidedly nonlinear.)

2. Shot noise, due to discrete nature of the electrons.

This contribution is conventionally modeled as a base current

$I_s = \sqrt{(2q\ Ic/h_{FE})}$ (amp per √Hz),

where q is the electronic charge (1.6×10^{-19} coulombs), h_{FE} the current gain of the transistor, and I_c the collector current. Being independent of frequency, this contribution is also in the form of white noise.

3. Emitter-base voltage noise

$E_{eb} = kt\ \sqrt{(2/qI_e)}$ (volt per √Hz),

where I_e is the emitter current (approximately equal to I_c if h_{FE} is large). This is again a white noise contribution.

4. Flicker noise (1/f noise)

This produces a noise voltage that increases as frequency decreases:

$I_f = \sqrt{(K\ I_c^a/f)}$ (amp per √Hz)

where K and a are constants of the order unity that depend upon the actual device.

The frequency below which the flicker noise starts to dominate the Johnson (white) noise is called the corner frequency. Ideally this should be below 100Hz.

(Note that the choice of whether to represent the sources as current or voltage is largely a matter of convenience, because they could be represented by either their Thevenin or Norton equivalents.)

With these sources, the noisy amplifier appears as in **Fig. 2**.

Note that Rs and $r_{bb'}$ shunt the noise currents so small values for Rs and $r_{bb'}$ will reduce these contributions as well as the thermal noise.

OPTIMIZING TRANSISTOR OPERATING CONDITIONS FOR MINIMUM NOISE[9]

The noise currents I_s and I_f increase with increasing I_c, while the voltages E_{eb} and, to some degree E_t (through the $r_{bb'}$ dependence), decrease with increasing I_c so there will be some optimum value of I_c that gives the overall minimum noise contribution. This is given approximately by:

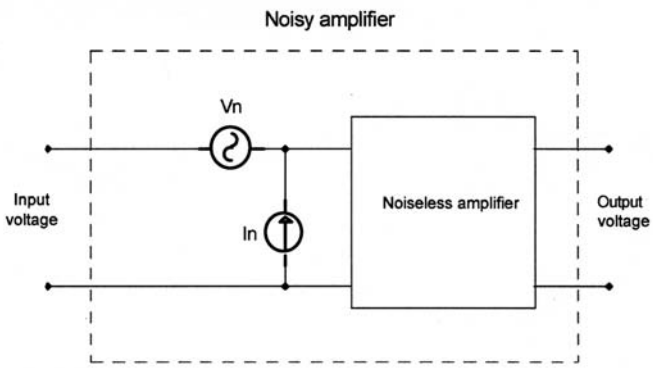

FIGURE 1: Noise sources in an amplifier.

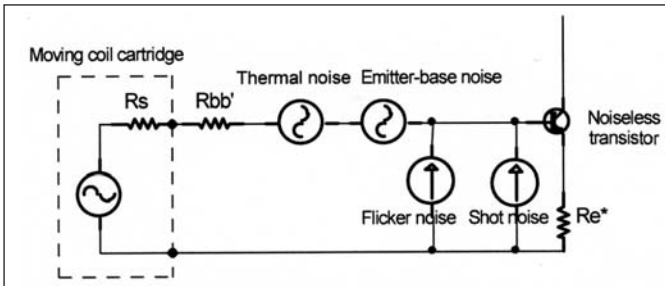

*Note that any resistance in series with the emitter will also add Thermal noise
FIGURE 2: Noise sources in real amplifier.

I_c (opt) = $\sqrt{(h_{FE})}/40$ (Rs + $r_{bb'}$ + Re).

For example, with a 2N 4403 ($r_{bb'}$ = 40Ω and h_{FE} = 140, see **Table 1**), a source resistance of 3Ω and Re = 10Ω, the optimum low noise collector current is

I_c (opt) = 11.8/2120 = 5.6mA

For a 2SC1316, $r_{bb'}$ = 2Ω, h_{FE} = 500 (**Table 1**) so the optimum collector current goes up to around 35mA.

However, the dip in noise with collector current is quite broad so the actual choice of current is not particularly critical from the noise aspect (though it is more critical with regard to distortion).

The minimum noise factor at the optimum collector current is given by

$$F = 1 + (r_{bb'} + Re)/Rs + ((Rs + r_{bb'} + Re)/2Rs + Rs/(2(Rs + r_{bb'} + Re)))/(h_{FE})^{0.5}$$

If $r_{bb'}$ + Re roughly equals Rs, and h_{FE} is around 100, the resultant noise factor would be F = 2.1 (NF = 3.2dB).

However, for the same 2N 4403 example (Rs = 3Ω, Re = 10Ω, $r_{bb'}$ = 40Ω) F = 17.1 and NF = 12.3dB, more than 9dB worse than the design ideal. This is because $r_{bb'}$ + Re is significantly larger than Rs. Indeed, the corresponding thermal noise (or "equivalent input noise") from $r_{bb'}$ and Re alone is 116nV or –136.2dBu, compared to the much lower –146dBu from the source itself.

TABLE 1: PARAMETERS FOR SOME CURRENTLY AVAILABLE LOW RBB' TRANSISTORS.

Type	Polarity	$r_{bb'}$(ohms)	h_{FE} (at 5mA)
2N 4403	p	40	140
2N 4401	n	40	120
2SA 1316	p	2	500
2SC 3329	n	2	400

You can improve this performance by reducing Re, using a transistor with lower $r_{bb'}$, and/or using a number of transistors in parallel[10,11] to reduce the effective $r_{bb'}$. For example, using two 2N4403 transistor stages in parallel effectively halves $r_{bb'}$ and Re, thereby reducing NF to 8.5dB. However, using a transistor with a lower $r_{bb'}$ = 2Ω, such as the excellent 2SA 1316 (**Table 1**), gives a much better improvement with F = 4.1, NF = 6.1dB, limited now by the noise contribution from Re. Two such stages in parallel would see this reduced to about 4.7dB, quite close to the design target even without any reduction in Re from the rather high notional value of 10Ω.

ICS AND TRANSFORMERS

Where Rs < $r_{bb'}$ + Re, an alternative solution is to use a transformer to obtain the lowest possible noise figure[12,13], the required turns ratio for low noise being n = $\sqrt{((r_{bb'} + Re)/Rs)}$. Taking again as an example a single 2N4403, with a typical 470R emitter resistor (now as the RIAA input stage), $r_{bb'}$ + Re = 500Ω and so, to be properly matched into a 3Ω cartridge, n = 13. This low ratio would avoid all of the problems associated with the manufacture of transformers with higher step-up ratios usually required for matching into the high impedance valve

input stages.

Another way of looking at the action of the transformer from the noise perspective is to consider that it has effectively reduced Re + $r_{bb'}$ by n^2. Proper loading of the cartridge and voltage gain would, of course, also still need to be considered.

Such low impedance and low ratio transformers (n<20) can be made to be nearly perfect with a flat response up to 500kHz and are not particularly expensive to manufacture, though they might be fairly expensive to purchase!

Low-noise ICs cannot match the best discrete input stages for the low source resistances under consideration here, as shown in **Table 2**. With source impedances of around 1kΩ, however (e.g., MM cartridges), they are quite competitive (e.g., –121.8dBu with a 5532 and Shure M75ED[5]).

TABLE 2: EQUIVALENT INPUT NOISE VOLTAGES FOR A VARIETY OF DEVICES[5].

Device	E_{in} (typical) dBu; Rs = 3R3, Re = 0
OP 27	-127
OP 37	-124
5532	-122
TL 072	-116
2N 4403	-135
2SA 1316	-144
3R3 resistance by itself	-146
1K resistance	-123

CONFIGURATION

The noise figure of an amplifier is independent of the input transistor configuration whether common emitter or common base[14]. This is because the base resistance, which usually limits noise performance, remains in series with the base-emitter junction and signal source whatever the arrangement. Also, the noise is generally not influenced by negative feedback because signal and noise are both reduced by the same factor (provided that the noise bandwidth remains unchanged). The exception is when the feedback circuitry introduces new impedances which are effectively in series or parallel with the source impedance. To minimize their effects, series resistances must be kept small and shunt resistances high compared to Rs[6].

Just about every conceivable configuration for the first stages of MC head amps has been proposed, including BJTs, FETs, and valves. FETs (which tend to have higher corner frequencies) and valves (which require high ratio step-up transformers) do not generally deliver optimum noise, distortion, and bandwidth performance for the very low source impedances being considered here. You can use BJTs in either common-emitter or common-base configurations. For a discussion of the various common-emitter head amp configurations, see Self[15].

A particular advantage of the simple common-base amplifier shown in **Fig. 3** is that the gain is essentially Rl/Rs, which decreases as the source impedance goes up. Because the outputs of MC cartridges also generally go up with impedance, this removes the need for provision to vary gain to any great degree.

Another characteristic of the simple grounded base amplifier is its low input impedance (roughly $h_{FE}/40\ I_c$). Because there must not be any DC flowing into the cartridge, this would normally necessitate a large value input coupling capacitor. However, capacitors in the input line exacerbate low-frequency noise unless the RC cutoff frequency is very low. This is due to their effect in shunting the 1/f (flicker) and shot noise currents as I mentioned, so their capacitive reactance must be kept small compared to $r_{bb'}$ + Rs + Re. In general, $2\pi f C = 1/(r_{bb'} + Rs + Re)$ at 30Hz is a reasonable design target. (For this reason it is better to place any low-frequency rolloff components after the low-noise amplifier stage.)

One way to avoid this problem is through a current mirror which provides a temperature-compensated offset (adjusted by R2) to bring the emitter voltage to 0V, as in the Hiraga arrangement[16] shown in **Fig. 4**. However, the distortion of such an arrangement is far from ideal.

A more elegant approach is to use complementary transistors in a symmetrical arrangement with their emitters at 0V. This arrangement has the additional advantage that the two $r_{bb'}$ are effectively in parallel, reducing their contribution to the noise. Furthermore, asymmetrical distortions tend to cancel. This was essentially the approach of Leach[17] shown in **Fig. 5**.

You could, of course, add more transistors in parallel[10,18], gaining nearly 3dB in S/N every time the number is doubled until the source impedance becomes the domi-

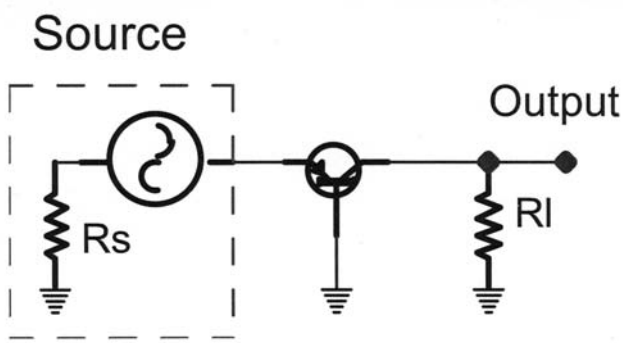

FIGURE 3: AC equivalent circuit for a common-base amplifier.

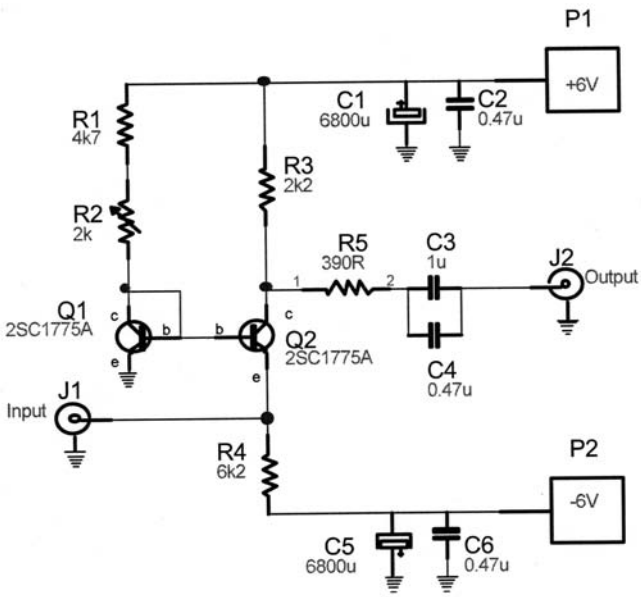

FIGURE 4: Common-base head amp of Hiraga.

nating factor. However, the distortion of such an arrangement is still rather high due to the loading effects of R5 (and any additional loading by the input of subsequent stages). This may be alleviated by following the common-base first stage with a common-emitter stage as shown in **Fig. 6**, thereby increasing the transfer conductance[19]. A similar arrangement was used in a simple preamp described by Fearby[20].

Combining complementary units into a symmetrical arrangement then gives the final configuration shown in **Fig. 7**. Note that there is no DC path from the battery to earth, so there can be no DC flowing into the cartridge. I used Darlington transistors in the second stage to minimize the loading of the high output impedance common-base first stage. All transistors operate in Class A, so there can be no crossover effects.

It would, of course, be possible to avoid the use of output coupling capacitors by employing additional active devices[21]. However, given the minuscule distortion measured with the current arrangement, I did not think such an extension was justified.

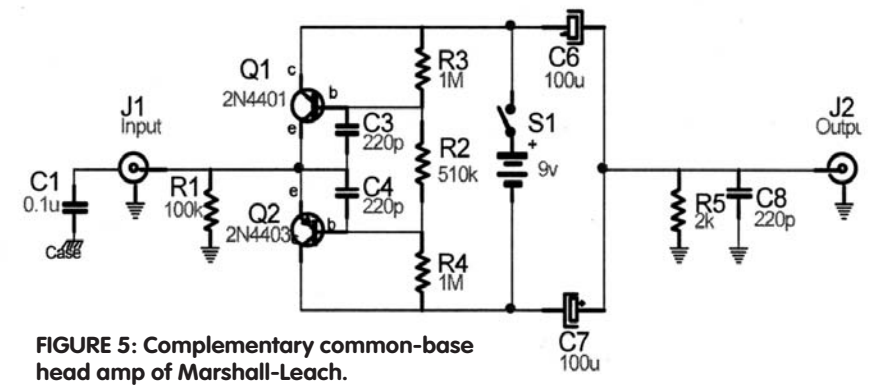

FIGURE 5: Complementary common-base head amp of Marshall-Leach.

DESIGN NOTES AND MEASURED PERFORMANCE

Noise and distortion. As I said, the optimum collector current to minimize noise in the first stage is around 5mA for

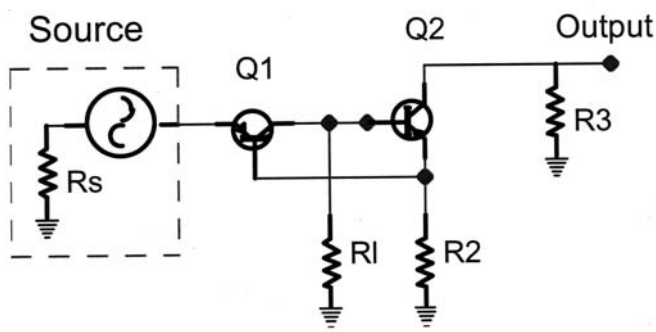

FIGURE 6: AC equivalent circuit for high transfer conductance common-base stage.

The Sound Strobe™

Speaker Diagnostic Tool

- Produces six selectable spectrum shape pulse signals to help you identify problems with your speakers and their interactions with your listening room.
- Quickly hear your speaker's degree of image focus, transient precision, and tonal neutrality.
- A great product for DIY speaker builders who want to tweak their designs and a must-have for anyone installing loudspeakers professionally.

To find out more about The Sound Strobe™, contact customer service by calling 888-924-9465 or e-mail custserv@audioXpress.com.

The Sound Strobe™ was designed by Dennis Colin, currently working as an Analog Circuit Design Consultant for microwave radios and a frequent contributor to *audioXpress* magazine.

Available in kit or assembled versions.

KT-3A	Assembled Sound Strobe™	$319.00 Sh.Wt. 3 lbs.
KT-3	Sound Strobe™ Kit	$275.00 Sh.Wt. 3 lbs.
PCBT-3	Sound Strobe™ PC-board only	$19.95 Sh.Wt. 1 lbs.

Old Colony Sound Laboratory, PO Box 876, Peterborough NH 03458-0876 USA
Toll-free: 888-924-9465 Phone: 603-924-9464 Fax: 603-924-9467
E-mail: custserv@audioXpress.com www.audioXpress.com

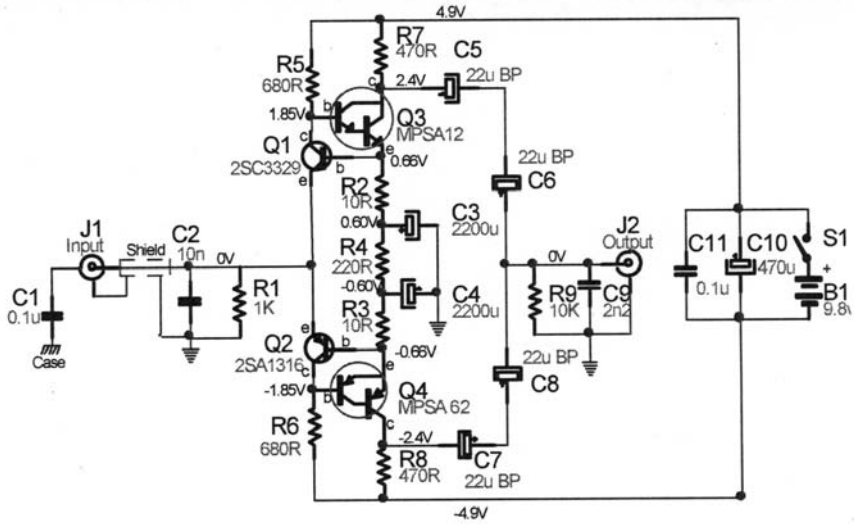

FIGURE 7: Final complementary common-base head amplifier configuration.

2N4401/3 or somewhat higher for a 2SC1316. This is essentially set by R5/6, because the base of the common-emitter stage (and hence the collector of the first transistor) is set at ±3 base-emitter voltage drops (one for the input transistor and two for the common-emitter stage) above 0V. The operating condition for the Darlingtons is a compromise between the required overall gain, set largely by R7/R2, R8/R3, the (low) impedance required for the feedback resistances R2/3 to minimize noise, and consequently the drive requirements of the stage and subsequent distortion produced. The current through the first stage I(Q1/2) also influences the input impedance as it does the distortion performance, as shown in **Fig. 8**, where I(Q3/4) has been set at 5.5mA.

Note that the distortion figures are quoted for 10kHz and a high 300mV RMS output (remember that the head amp output will be fed into a normal MM input stage which is designed to accept maximum levels below around 30mV). This was necessitated by the exceedingly low levels of distortion produced by the head amp and the noise floor for the measuring system which sets a lower measurable distortion limit of 0.001%. All distortion products vanished into the noise at outputs below 100mV RMS.

In order to explore the distortion performance further, I evaluated the distortion and noise of the different arrangements using a Spice simulation program (Micro-Cap 8.0) and showed them for various levels of output voltage in **Fig. 9**. The simulation results for the THD of the head amp were slightly above those measured, probably due to inadequate modeling of the Darlington BJTs. To correct this, I displaced the simulation curve downwards so that it passes through the two measured values.

The simulation also showed that distortion products above the third are virtually non-existent. This was also true for the Leach and Hiraga arrangements. Of note is the reduction in THD by a factor of nearly 50 in going from the single-ended Hiraga arrangement to the symmetrical Leach arrangement and a similar factor again in going to the present configuration (i.e., the distortion of the head amp presented here is about 67dB below that of the Hiraga!).

Given that the maximum recorded level is around 30m/s corresponding to a MM cartridge output of 30mV, the distortion levels of the head amp at similar output levels (or 600µV input) are below 0.0002% and almost certainly below that of any other part of the reproducing chain. (For comparison, the M-L design delivers THD below 0.01% and the Hiraga only below 0.4%, although the distortion is almost entirely 2nd harmonic and therefore probably not quite so objectionable.)

The simulation also showed that the level of distortion was not dependent upon which of the transistor pairs shown in **Table 1** were used in the input stage.

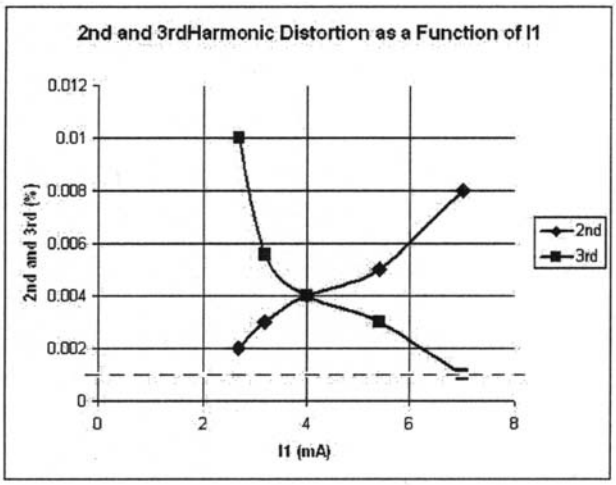

FIGURE 8: Second and third harmonic distortion components as a function of current through Q1, Q2 (the dotted line represents the noise floor of the measuring system).

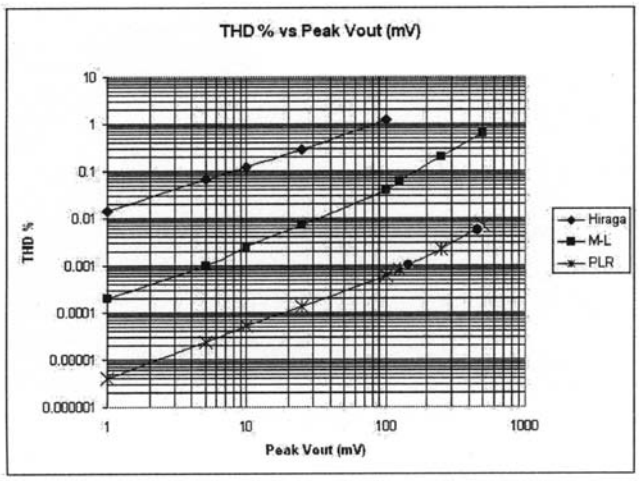

FIGURE 9: THD for the different configurations as a function of output level (assuming a 3Ω source). The measured data for the head amp are shown as •.

This is, of course, not the case for the noise performance, which is determined by the characteristics of the first transistors.

Measurement of the broadband noise performance is not a simple matter, being only a few microvolts at the output and influenced by any hum pickup resulting from proximity to AC sources (such as transformers, motors, and so on). It is unlikely to differ significantly from the calculated performance as I've mentioned (i.e., NF about 3dB, E_{in} about –140dBu), so I chose instead to measure the S/N in relation to the real vinyl source.

In relation to actual recorded levels, after RIAA equalization, the head amplifier with 2N4401/3 transistors produced 65.4dB S/N in relation to 3.9cm/sec at 1kHz from the W&G Professional Test Record (WG25/2434), corresponding to a signal input of 66µV from the FR1 MkIII cartridge. Even with these higher noise transistors, the head amp noise was still about 10dB below the residual surface noise of the record (measured from 300Hz upward to eliminate any rumble content from the result). With the 2SC1316/2SC3329 pair this improved to 70.8dB, indicating that the head amp NF was less than 5dB. The S/N was, in fact, a few dB better than a Shure V15 III cartridge connected to the MM input of the same RIAA preamp that I used with the head amp for the test (probably indicating that there is room for improvement in the noise performance of my RIAA stage).

As I said, you could further reduce the E_{in} by lowering the value of R2, R3 to, say, 4R7. For 2SC3329/2SA1316 transistors this would reduce E_{in} from 0.37nV per √Hz to 0.31nV per √Hz, an improvement of 1.5dB, and would give a NF of 3.2dB. In order to maintain the gain, you would also need to halve R7 and R8 to 220Ω and R4 to 110Ω to maintain the operating points of the collectors of Q3/4 at around 2.5V to maximize the dynamic range. Reducing R2/3 further to 3R3 (with subsequent changes to R4, R7, and R8) only produces a further 0.3dB noise improvement.

However, the lower impedances presented to Q3/4 then lead to an increased distortion, roughly doubling it for the 3R3 case compared to the 10R chosen. The values chosen represent a good balance between low noise and minimal distortion. However, if you consider minimum noise important, then you could implement these changes.

Input and Output Impedance. As noted, the input impedance of a common-base amplifier depends inversely upon the collector current, which, in this design, is determined by R5/R6. With the preferred (i.e., minimum distortion) value of 680Ω, the input impedance is about 8Ω, and my FR1 MkIII is perfectly happy with this value. If, however, I thought it was desirable to raise this above the "greater than 10Ω" recommended by Ortofon, for example, R5/R6 should be increased to 2k2. This will result in a slightly higher distortion level, though at 0.0002% at 10mV peak output it will still remain well below the threshold of the rest of the system.

Increasing R5/R6 to 4k will further raise the input impedance to 20Ω, though the THD will then increase to around 0.0006% at 10mV and the noise will similarly increase by a dB or so because of the lower collector current. However, these are still excellent results. The output impedance with the nominated component values is 375Ω and will remain below 1k for any of the modified values suggested.

Gain. The gain with zero source resistance is 66 (36dB). As the source resistance increases, there will be some attenuation of the input signal by the low input impedance. For a 3Ω cartridge, the effective gain is about 50 (34dB).

Bandwidth. Without C5, the 3dB bandwidth of the amplifier is from 4Hz to over 5MHz! However, RF interference is not usually a problem due to the very low input impedance. Furthermore, most well-designed RIAA preamplifiers incorporate some form of low-pass filtering in the input stage. Nevertheless, using 0.0027µF for C5 introduces a rolloff at 150kHz with no measurable degradation of distortion if some margin of safety is required.

Dynamic Range. As noted, the levels of distortion are very small up to outputs of around 300mV RMS, THD rising

DSP Knowledge...Optional !

Signal Wizard II

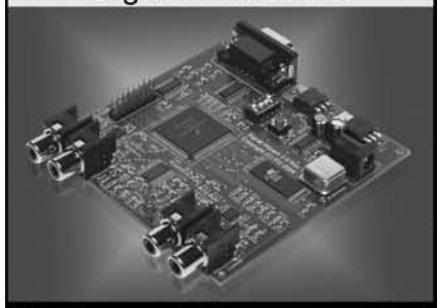

Want to create DSP crossovers & EQ without the learning curve?

With Signal Wizard you can !

Just specify your filter in the PC software, click to load DSP code into hardware, and then select the filter!
Designers appreciate the ease of changing filters on the fly!

- FIR, IIR and adaptive filters.
- Butterworth, Chebshev, LP-Brickwall.
- Low/high pass, bandpass/bandstop pole-zero placement.
- Spectrum analyzer and oscilloscope.
- Frequency response import (text file) allows precise loudspeaker equalization.
- Channel gain, mixing and inversion.
- Variable delay for precise LS alignment.
- Flash memory for standalone operation.
- Transparent audio - 24bit, 107dB SNR, range of sampling rates -4-48KHz
- High performance Freescale 56309 DSP

Applications:

- Loudspeaker crossover, equalization and room correction
- Acoustics research and development
- Sensor conditioning, and more...

Signal Wizard can equalize your loudspeaker!

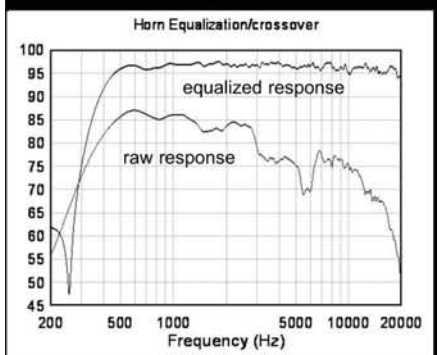

Complete kit...everything you need $399

Saelig Co Inc
European Technology
www.saelig.com
info@saelig.com
p: 585.385.1750
f: 585-385-1768

Visit the web at: www.saelig.com/Suppliers/ezfir/signalwizard2.htm

The book on loudspeaker testing from noted expert, Joseph D'Appolito!

by Joseph D'Appolito

Learn to test your loudspeakers with this great tutorial. More than simply a "how-to," the book uses specific examples to demonstrate the principles involved. The final two chapters provide a highly readable explanation of the theories needed to understand PC-based electrical and acoustical data-acquisition and analysis systems. Examples of measurements made using MLSSA and CLIO are included. A must-have book for experienced hobbyists, speaker designers, and technicians. 1998, 176pp., 8½" × 11", softbound, ISBN 1-882580-17-6. Sh. wt: 2 lbs.

BKAA45.....**$34.95***

*Shipping and handling additional

To order call
1-888-942-9465
or online at
www.audioXpress.com

Old Colony Sound Laboratory
PO Box 876 Peterborough NH 03458-0876 USA
Toll-free: 888-924-9465 Phone: 603-924-9464 Fax: 603-924-9467
E-mail: custserv@audioXpress.com www.audioXpress.com

to 0.06% at 800mV RMS (2V p-p) and rising fairly rapidly thereafter. However, this represents a huge dynamic range, representing 44dB headroom above the reference level of 5mV at 5cm/sec for a MM cartridge. This is a safety margin of nearly 30dB beyond even the hottest recorded levels (30cm/sec, 15.5dB above 5cm/sec). For my particular FR1 MkIII cartridge, this actually translates to 47dB above 5cm/sec!

CONSTRUCTION

The recommended PCB layout for a single channel is shown in **Fig. 10** and the component locations in **Fig. 11**. You can build it either as two separate "monoblock" units or with two side-by-side on a single board. **Photo 1** shows a board fully populated. The transistor outlines given on the silk-screen overlay are correct for 2N4401/3 and MPSA12/65 transistors.

The 2SA1316/2SC3329 and BC516/BC517 have different TO92 pinouts as shown in **Fig. 12**, so you will need to orient them differently to ensure that their base, emitter,

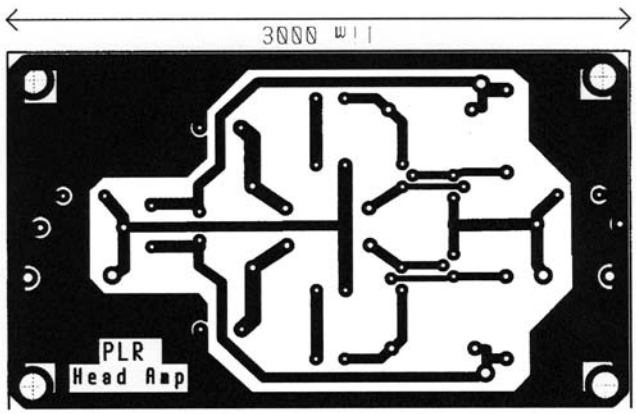

FIGURE 10: Suggested PCB layout for one channel.

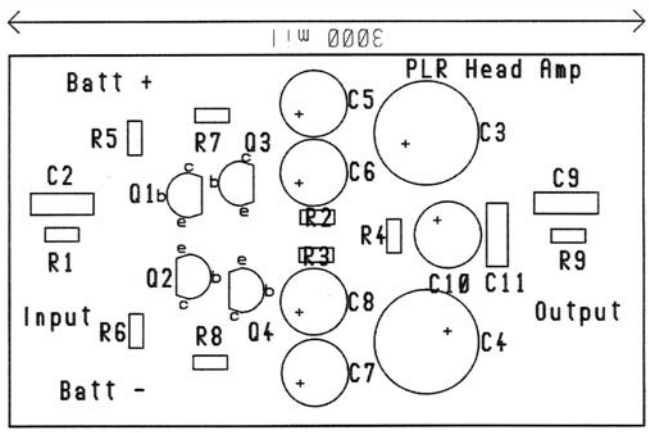

FIGURE 11: Component location.

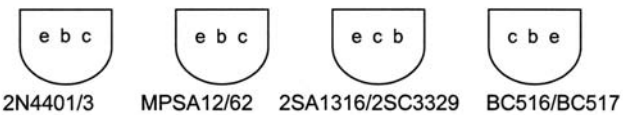

FIGURE 12: Pinouts for the various transistors.

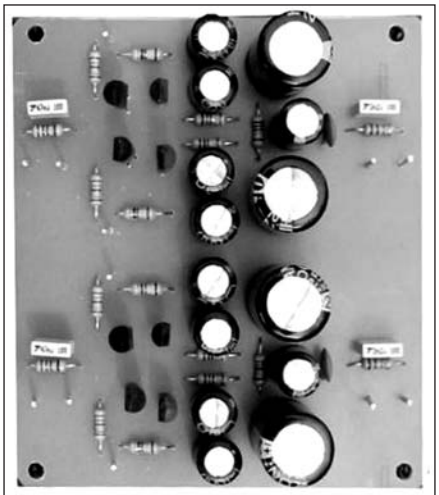

PHOTO 1: The prototype head amp (two channels side-by-side).

PHOTO 2: Head amp in 4″ × 3″ diecast box (the gray wires are the twin shielded power leads that connect with the batteries that were housed in a separate box in the prototype).

and collector leads are properly located. Note that the pinouts of the transistors should not be checked in the usual way with an ohmmeter because reverse-biasing of the junction can lead to an increase in flicker noise[11]. The completed prototype is shown in **Photo 2**.

Metal film resistors are recommended throughout and bipolar capacitors should be used for C5–C7 to minimize distortion[22, 23], although you could also use 22µ polar electrolytics back-to-back. C3 and C4 are normal polar electrolytics, which you should, of course, install with the right polarity. Polypropylene caps are preferred for C2 and C9, while disc ceramics suffice for C1 and C11.

For the emitter common-emitter stages I used MPSA12/62 Darlington transistors. Some suitable alternatives are shown in the parts list. Given the vanishingly small levels of distortion, single BJTs such as BC549/BC559 would probably also be quite satisfactory in these locations. Ideally the 2SA1316/2SC3329 pairs should have their current gains matched to about 10% or better to ensure correct balance.

You should mount the PCB in a steel box to provide some shielding from RF and magnetic hum fields (though I housed the prototype in a die-cast box with satisfactory results). The input and output phono sockets (if used) must have their grounds isolated from the case. Sockets with isolated grounds are readily available, although direct wiring is always an option.

You should mount the circuit board on metal standoffs, with metal star washers placed between the standoffs and the case and the board to ensure good electrical connection. Install capacitor C1 right at the input socket and keep the leads as short as possible to minimize RF interference. Mount the unit away from any transformers or motors to minimize hum pickup. (If you mount the batteries in a separate box, you should shield the power leads, again to minimize any interference.)

Because the current draw is around 10mA for each channel, the 9.6V batteries (one for each channel) need to have a capacity of at least 600mAh. I arranged the on-off switch so that when it was in the "off" position, the batteries (each 8 × 600 AA mAh NiCads) are connected to a 15V supply, from the preamp, via two 500Ω resistors (one for each battery) to give a 10mA trickle charge when using the system with CD or radio. When in the "on" position, the batteries must be completely isolated (both the positive and negative terminals) from the external supply, requiring a 4-pole, double-throw switch.

Of course, you could remove the batteries or cells from the head amp and charge them at higher rates using a dedicated external charger. In such a case, 2000mAh NiMH cells would give around 160 hours of operation between charges. When not in use, don't forget to switch it off to preserve the batteries.

TESTING

Some of the key voltages are shown on the circuit diagram. Check these before connecting the unit to the amplifier,

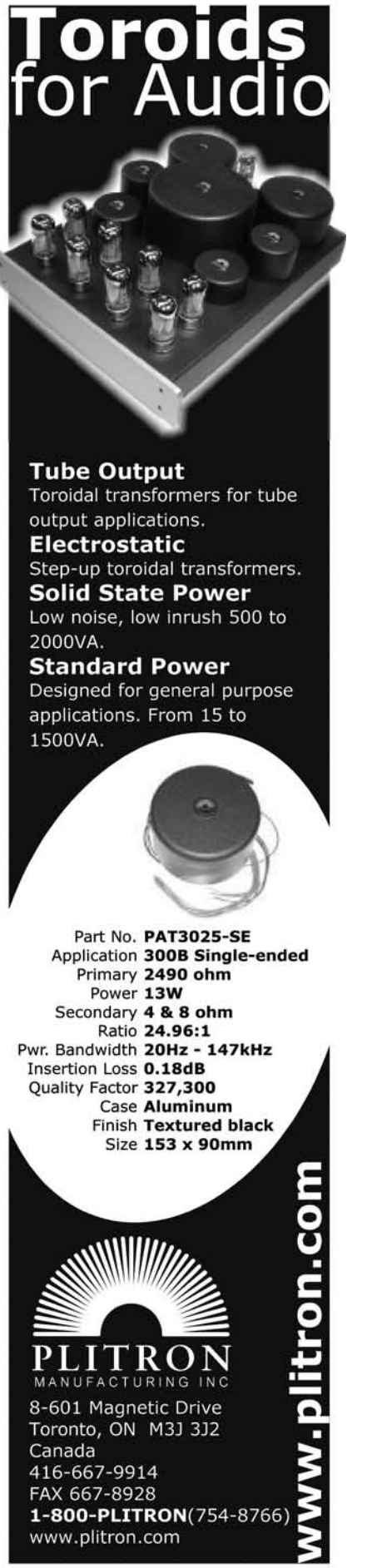

Rocky Mountain Audio Fest '06

Denver, CO • October 20, 21, & 22, 2006

The Third Annual
Rocky Mountain Audio Fest

The premiere audio show for music reproduction in the home

Stereo and Multi-Channel

"RMAF was one of the best-sounding shows I've been to, and one of the most interesting and varied." *Jonathan Valin, The Absolute Sound*

Special Attractions
– Affordable Systems
– iPod as a Source

Ticket Prices

Three-Day Pass
$25 - Adults
$12.50 - Students
Children under 12 free

One-Day Pass
$10 - Adults
$5 - Students

Check website often for updates on exhibitors, seminars and entertainment

Online Pre-Registration
(PayPal/Credit Cards only – Pre-Registration ends 10/15/2006)

Registration at the Door
(cash or checks only with valid ID)

www.audiofest.net • 303-393-7918
rmaudiofest@yahoo.com

and do not connect the head amp to the MC cartridge before verifying that the input terminals are sitting at 0V. An error here could result in a very expensive blown cartridge. Voltages much different from these (more than a few 10s of mV) indicate a wiring fault or bad component (though they depend

PARTS LIST (per channel, double for a stereo pair)

SEMICONDUCTORS

Q1 ..... 2SA1316*
Q2 ..... 2SC3329*
Q3 ..... MPSA12
Q4 ..... MPSA62

*preferably with current gains matched to about 10%

Alternatives

Q1/Q2: 2SD786/2SB737 (2N4401/2N4403 can also be used but will give 5.5dB higher noise)
Q3/Q4: MPSA 14/MPSA 64 or BC516/BC517 (You could also use normal BJTs such as BC549/BC559 with little increase in distortion. Note that this substitution will change some of the DC voltage levels somewhat.)

CAPACITORS

C1, C11 ..... 100n 50V disc ceramic
C2 ..... 10n 63V miniature polypropylene (Wima, 5mm lead spacing)
C3, C4 ..... 2200µF 25VW electrolytic (radial leads)
C5, C6, C7, C8 ..... 22µF 50VW bipolar (radial leads)
C9 ..... 2n2 100V miniature polypropylene (Wima, 5mm lead spacing)
C10 ..... 470µF 16VW electrolytic

Alternatives

C2 and C9 could be 100V MKT miniature polyester (63V polyester capacitors will give higher distortion)
C5, C6, C7, C8 could be 22µF/50V electrolytic (connected back-to-back on the PCB)

RESISTORS (all 0.25W or 0.5/0.6W 1% metal film)

R1 ..... 1k
R2, R3 ..... 10R
R4 ..... 220R
R5, R6 ..... 680R
R7, R8 ..... 470R
R9 ..... 10k

Alternatives

0.5W carbon film would probably be OK.
R5, R6 could be increased to 2k0 for 10Ω input impedance, or 3k9 for 20Ω input impedance.

SUNDRY OTHER ITEMS FOR THE HEAD AMP:

PCBs (either two single channel or one double channel)
Metal box (preferably steel)
4 × insulated RCA sockets
12 × PCB pins
Shielded and twin shielded wire
Battery clips (2 × 8 cell)
4-pole 2-throw toggle switch if batteries are to be trickle-charged off an external supply; Otherwise, DPDT
½″ metal circuit board standoffs
Screws, star washers, and so on

to some degree on the actual battery voltage).

When connected to the amplifier, the head amp should be switched on before you select the "phono" input on the preamp to avoid the large switch-on transient. You should ground the turntable at either the head amp or preamp, whichever gives the lowest hum level. *aX*

Circuit boards are available through Old Colony Sound Lab, PO Box 876, Peterborough, NH 03458, 603-924-9464, Fax 603-924-9467, e-mail custserv@audioXpress.com www.audioXpress.com

REFERENCES

1. Rossiter, P.L., "An Exponential Horn Loudspeaker," *Bulletin of the Australian Acoustical Society*, vol. 3, No 1, 10–25, 1975.

2. Futrell, R.A., "The LP Terminator," Jan. '03 *audioXpress*, pp. 8–15.

3. Maxwell, J., "Phono Cartridge Noise," *Audio*, 40–41, March 1977.

4. van den Gevel, Marcel, "Noise and Moving Magnet Cartridges," *Electronics World*, 38–43, October 2003.

5. Self, D., "Precision Preamplifier '96," *Electronics World*, 540–546, July/Aug. 1996.

6. Walker, H.P., "Low Noise Audio Amplifiers," *Wireless World*, 233–237, May 1972.

7. Baxandall, P.J., "Noise in Transistor Circuits," *Wireless World*, Vol. 74 388–92 & 454–9, 1968.

8. van der Zeil, A., "Noise in Solid-State Devices and Lasers," *Proc IEEE*, vol. 58, Aug. 1970.

9. Foord, A., "Introduction to Low-Noise Amplifier Design," *Wireless World*, 71–73, April 1981.

10. Faulkner, E.A., "Design of Low noise Audio-frequency Amplifiers," *Radio and Electronic Engineer*, 17–30, Vol. 36, 1968.

11. Grocock, J.A., "Low-Noise Wideband Amplifier," *Wireless World*, 117–118, March 1975.

12. Adam, W., "Designing Low Noise Audio Amplifiers," *Electronics and Wireless World*, 628–633, June 1989.

13. Millett, P., "Moving-Coil Phono Cartridge Transformers," May '02 *audioXpress*, pp. 58–62.

14. Grey, P.R. and Meyer, R.G., *Analysis and Design of Analog Integrated Circuits*, Wiley, NY, 1977.

15. Self, D., "Design of Moving Coil Head Amplifiers," *Electronics and Wireless World*, 1206–1209, Dec 1987.

16. Hiraga, J. Originally published in *L'Audiophile*. See, e.g., www.bonavolta.ch/hobby/en/audio/prepre.htm.

17. Leach, W. Marshall, "Build a Preamp," *Audio*, 36–40, Feb. 1978.

18. Bradford, R. Lee, "Low Noise Moving-Coil Preamp," *Wireless World 75*, July 1981.

19. Ed Cherry, Private Communication: I thank Ed for suggesting this arrangement.

20. Fearby, L.F., "The Fearby Front End," *Hi-Fi News and Record Review 105*, Dec. 1979.

21. See, e.g., an unpublished suggestion attributed to Hiraga (www.hilberink.nl), though the same circuit has also been published by Rabeyrolles in *L'Audiophile* (see, e.g., www.bonavolta.ch).

22. Bateman, C., "Capacitor Sound 6," *Electronics World*, 44–51, Jan. 2003.

23. Self, D., "Capacitor Distortion," *Hi-Fi News and Record Review Views*, 23, Nov. 1985.

TRIPHAZER.COM
CD Remastering 19.99$

Send us your 44.1 16 bit CD and We will remaster your original recording for incredible sound. Now for the very first time you can hear the AMAZING sonic benefits of Tritium Electronics Tri-Phazer audio processors on any recording reguardless of age or quality.

Tri-phazers remove the SKEW and distortion your recording's have accumulated on the long journey from mind to master. 1 day turn around, priority shipping included. See our site for further information.

Send to: Tritium Electronics
8301A Lapham st. West Allis
Wi 53214, tritium@execpc.com
Phone: 414-475-0007
Limited time offer 44.1 CDs only.
WELCOME TO THE FUTURE OF RECORDING

FREE SAMPLE

IF YOU BUY, SELL, OR COLLECT OLD RADIOS, YOU NEED...

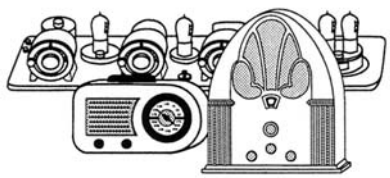

ANTIQUE RADIO CLASSIFIED

Antique Radio's Largest Monthly Magazine
100 Page Issues!
Classifieds - Ads for Parts & Services - Articles
Auction Prices - Meet & Flea Market Info. Also: Early TV, Art Deco, Audio, Ham Equip., Books, Telegraph, 40's & 50's Radios & More...
Free 20-word ad each month for subscribers.
Subscriptions: $19.95 for 6-month trial.
$39.49 for 1 year ($57.95 for 1st Class Mail).
Call or write for foreign rates.

Collector's Price Guide books by Bunis:
Antique Radios, 4th Ed. *8500 prices, 400 color photos* $18.95
Transistor Radios, 2nd Ed. *2900 prices, 375 color photos* $16.95
Payment required with order. Add $3.00 per book order for shipping. In Mass. add 5% tax.

A.R.C., P.O. Box 802-A16, Carlisle, MA 01741
Phone: (978) 371-0512 — Fax: (978) 371-7129
Web: www.antiqueradio.com — E-mail: ARC@antiqueradio.com

A Tube-Based Power Solid-State Amp

This low-cost, high-performance hybrid unit, called the Nishiki amp, includes a tube driver stage and transistor output stage.

By Wim de Haan

PHOTO 1: The completed Nishiki amp and power supply.

In my opinion a hybrid amplifier is in many ways the ideal amplifier—it combines sonically favorable tubes with modern semiconductors to drive low impedance loudspeakers. My design goals of this amplifier project are low cost, low component count, high performance sound, good specs, and reliability and flexibility in the use of different components.

Using tubes, you are able to come up with a less complex design yielding low component count, rather low cost, exceptional sound, and good specs. However, if you choose to build an all-tubes-based amplifier, it is almost mandatory to use an output transformer to drive the loudspeakers. This transformer will make the overall cost high, far too high for a project like this. So why not use modern semiconductors such as a power transistor instead of a high-cost transformer?

This project can be divided into two parts—the driver stage and the power stage (aka current stage). The main part of this project is the current stage, which includes a circuit board. I mention a few tube/circuit possibilities for the driver stage; however, you could use other tube circuitry as well. The driver stage should be able to supply an output voltage of approximately 20V RMS into a load of 10kΩ.

As with many of my other DIY projects, I chose a name for this design as well. Because the overall result is refined and colorful, I named it *the Nishiki Amplifier* (**Photo 1**).

DRIVER INPUT STAGE

At the beginning of this project, I chose to use 5965 tubes. I had purchased several new 5965 RCAs a long time ago—for just 2 euros each—although I had never used this tube before in any of my projects. This 9-pin noval tube is quite interesting. Its pin setting conforms to the ECC83 family, its mu is as high as 47, and the plate resistance Rp is as low as an ECC82/6SN7 tube. So with a single 5965, you could come up with a low component count input/driver circuit.

In a previous hybrid amplifier, I used power MOSFETs and a paralleled 5687 tube as a driver, resulting in excellent sound and specs. However, in this new design I wanted to use power transistors instead of MOSFETs, so the driver stage needed redesigning.

At first I used the sections of the 5965 in parallel as a straightforward grounded cathode amplifier, resulting in a relative low output impedance of about 3k. With the first prototype, I noticed high distortion figures—the Hewlett-Packard distortion analyzer showed up to 3% distortion at full swing with load. I assume the drive signal is stressed too much by the relative low impedance transistor output circuit. These figures don't reveal everything about the sound quality, but this is unacceptable. Distortion was mainly second harmonics.

I tried a combination of a common and proven grounded cathode amplifier with a direct-coupled cathode follower (aka compound amplifier); in this way gain and low impedance are combined using one single tube (**Fig. 1**).

The result was very promising. The

FIGURE 1: Driver stage using the 5963/ECC82.

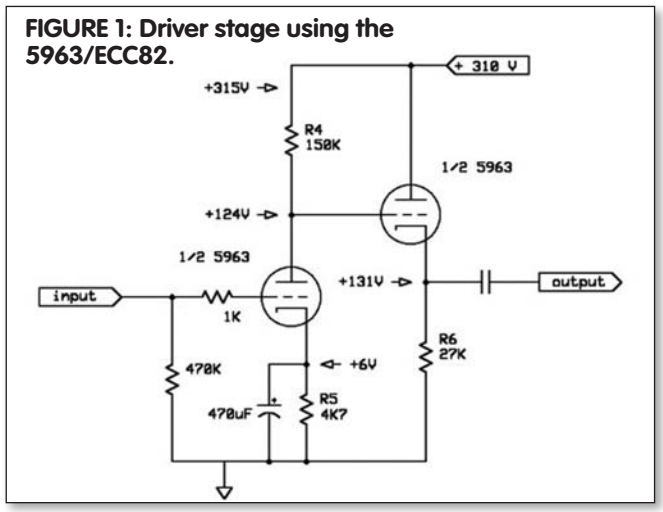

distortion measurement in the prototype was as low as 0.35% at 1W with no overall feedback. This is a very acceptable figure because frequency range measured far above 100kHz and square waves looked just great. This would be the circuit to try.

Measuring the amplifier using this tube and the transistor output stage, I noticed that the distortion progressively increased with the output power. Lowering the anode resistor to 33k and readjusting the bias voltage didn't improve the situation—it became worse. Switching tubes from left to right and vice versa or installing brand new ones didn't change the situation. An attempt to replace the 27k cathode resistor with a transistor-based current source didn't help either; improvement was there but still did not convince me. Using +400V DC and a 68k resistor made the best out of a worse case, but distortion was still too high. The 5965 seemed not to be the perfect choice in this application/design, also because the overall sound of the amp using this tube is very disappointing.

In **Fig. 2** you see how the 5965 is used with 10dB feedback. Distortion and sensitivity are acceptable now. In case you prefer the 5965 over the ECC82 and ECC88, I believe you should employ the feedback option.

In this circuit with feedback the amount of feedback depends also on the output impedance of the preamp which is used, because it is in series with the 22k. Unfortunately, I don't have any values for different impedances. The value

FIGURE 2: Driver stage using the 5965 and 10dB feedback.

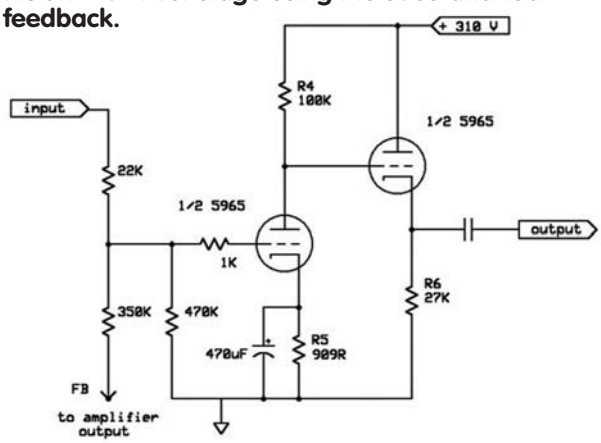

TABLE 1: Component values and voltages circuit alternatives

Tube alternatives for driver circuit

Tube	R anode [R4] gnd cathode amp	R cathode [R5] gnd cathode amp	R cathode [R6] cathode follower	gain
ECC82	150k	4k7	27k	21dB
5963	150k	4k7	27k	20dB
5965	100k	909Ω	27k	30dB
5965 10dB feedback	100k	909Ω	27k	20dB
ECC88	150k	2k7	27k	27dB
6N1P	150k	1k8	27k	28dB

Driver circuit voltages*

Tube	U psu main DC power supply	U anode [R4] gnd cathode amp	U cathode [R5] gnd cathode amp	U cathode [R6] cathode follower
ECC82	317V	118V	6.1V	126V
5963	317V	124V	6.0V	131V
5965	310V	104V	1.9V	109V
ECC88	317V	114V	3.7V	117V
6N1P	306V	118V	2.3V	120V

*Notice: actual measured values related to ground, all measurements approximate values; depends on varieties in tubes and power supply components.

AURA SOUND

Aura Sound introduces two new aluminum cone woofers with; Low Distortion, Long Excursion and Shielded NRT Motors. All at a more affordable price!

NS10-513-4A 10" Woofer

Specifications:	NS10	NS12	
Nominal Diameter	10	12	Inches
Impedance	4	4	ohm
Sensitivity 2.83V/1M	88	89.5	dB
Power RMS	200	200	W
VC diameter	51.3	51.3	mm
X-max linear	10	10	mm
X-max maximum	22	22	mm
Fs	29	23	Hz
Re	3.04	2.86	ohm
Qms	9.4	9.1	
Qes	0.35	0.39	
Qts	0.34	0.37	
Vas	53.6	127	liters
Sd	346	503	cm^2
Cms	318	356	µm/N
Mms	95.5	137	grams
Bl	12.2	12	Tm
Magnet Material		Neodymium	
Cone		Aluminum (black)	
VC Wire		Copper	
Magnet Shielding		Inherent	
Surround		Rubber	
Frame		Cast, with heat shrink	
Price	$171	$182	Each

NS12-512-4A 12" Woofer

MADISOUND SPEAKER COMPONENTS, INC.
8608 UNIVERSITY GREEN
P.O. BOX 44283
MADISON, WI 53744-4283 U.S.A.
TEL: 608-831-3433 FAX: 608-831-3771
e-mail: info@madisound.com
Web Page: http:/www.madisound.com

of 350k that is given for approximately 10dB feedback refers to a low output impedance preamp of approximately 600Ω or less.

I also tested the ECC82 and the ECC88, with which I am familiar. After some fine-tuning trying different values for anode and cathode resistors, I noticed already that with these tubes the amplifier yields much lower distortion figures at all levels. The ECC88 showed its quality—at 60W output I measured only a 0.5% distortion. You might like to check out the section specifications for the overall results.

I used several driver tubes in the prototype and I have included a list with tubes and their specific component values. I recommend you start the project with an ECC82, which will give the best balance in specs and sound. Finally, I used a 5963 tube, which a friend gave to me to experiment with; it is a computer tube and an ECC82 lookalike.

First try the ECC82 and then the ECC88, but just compare the sound, not the specs. It is interesting how the overall sound and character of the amplifier changes with different driver tubes. You can easily make changes—just one resistor per channel and rewire the heater wire. I'm undecided about which is my favorite; I can live with both of them, but I believe the ECC82 gives a more balanced musical sound and the ECC88 a more technical loudness curved sound.

I used a Sylvania 6189 for the ECC82 and an E88CC by JJ Electronic for the ECC88. I also tested the Russian 6N1P, whose sonic behavior, I believe, is a combination of the ECC82 and ECC88. The 6SN7, which equals the ECC82 in almost every aspect, would be a good choice for this project; however, I didn't try this tube, which uses an 8-pin octal socket. A compound circuit using the ECL82 tube, which contains a high mu triode section and a power pentode section, would also be an interesting approach.

Because of the relative low input impedance of approximately 10k of the transistor power stage, the coupling capacitors should be at least 4.7µF. I believe the low cutoff frequency of the amplifier should be around 3Hz. With a 1µF cutoff frequency, the value is about 15Hz, which I believe is too high. In the prototype I used mainly a 1µF and changed it later to the higher value.

PHOTO 2: Coupling capacitors choices.

For a coupling cap, I chose an audio-grade ClarityCap capacitor by ICW. B&W is using ClarityCaps in its prestigious Nautilus series. The used SA type produces very good results and is rather low priced compared to other audio-grade capacitors. You might wish to check out e-speakers.com for pricing.

The ClarityCap capacitors are hand-wound using a 10µm (630V DC) rated polypropylene film. Following a special heat treatment cycle, insulated copper terminals are hand-soldered to give the best possible connection. The inherently low dissipation and dielectric absorption factors of polypropylene allied with excellent mechanical stability results in an extremely detailed sonic performance. The construction also results in a low self-inductance and ESR; the devices are highly stable with regard to temperature and frequency.

If you would like to keep the amplifier to a minimum cost, you should try an industrial-type film capacitor, such as the Epcos B32524 series, which were once known as Siemens. The capacitor is 4.7µF rated at 250V DC and is available at Farnell.com (order code 400-2179) and priced at only 1.40 Euro each. Though I believe it's worthwhile to invest a little more, with the ClarityCap the overall performance such as soundstage and resolution will improve. But again, I believe this Epcos capacitor along with the Russian 6N1P tube will do just fine! Of course, you are free to choose any coupling capacitor you like, but keep in mind the minimal DC voltage is 400V DC; you could also use a 250V DC.

If you want to give the amplifier an exclusive (and far more expensive) look, you could use Jupiter Beeswax paper coupling capacitors, which are large and expensive and extraordinary in design. Because these capacitors use beeswax, you can't operate them above 43° C (!), and they don't come cheap. The four coupling capacitors together are more expensive than the basic amplifier itself. List price for a 2.2µF (which was used for evaluation) is about $30 US each. Again, if you just want to enjoy your CD selection, you should use the 6N1P/Epcos duo.

OUTPUT STAGE

For the output stage you could use transistors or MOSFETs. In a former project I used so-called IGBTs, but these are out-of-production now and need a special design approach so are not very good choices. In hybrid projects I have used power MOSFETs for the current output stage and noticed that the 2SK1058 and BUZ900 families give different sonic results. Both are expensive if you compare them to power transistors.

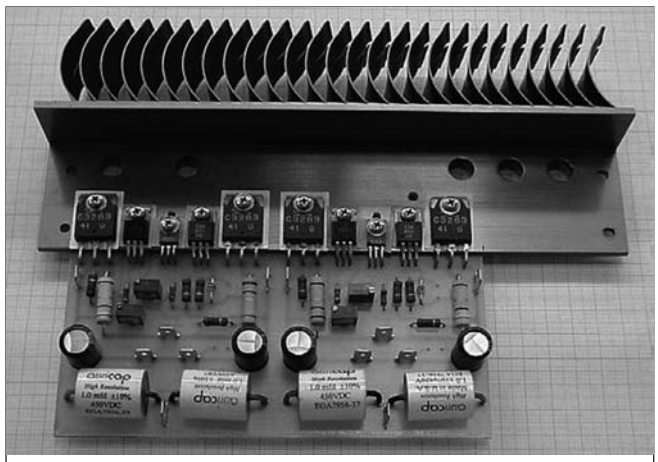
PHOTO 3: Prototype circuit board using an original Sony heatsink.

Some time ago I repaired a Proton D1200 power amplifier, which uses eight power transistors per channel, and because I had some left over I decided to use them. The Proton uses the high performance multi-emitter LAPT devices manufactured by Sanken. For the output stage I chose a so-called Quasi-Complementary Output Stage (**Fig. 3**) over other configurations, not the more common complementary emitter follower.

FIGURE 3: Complete circuit diagram.

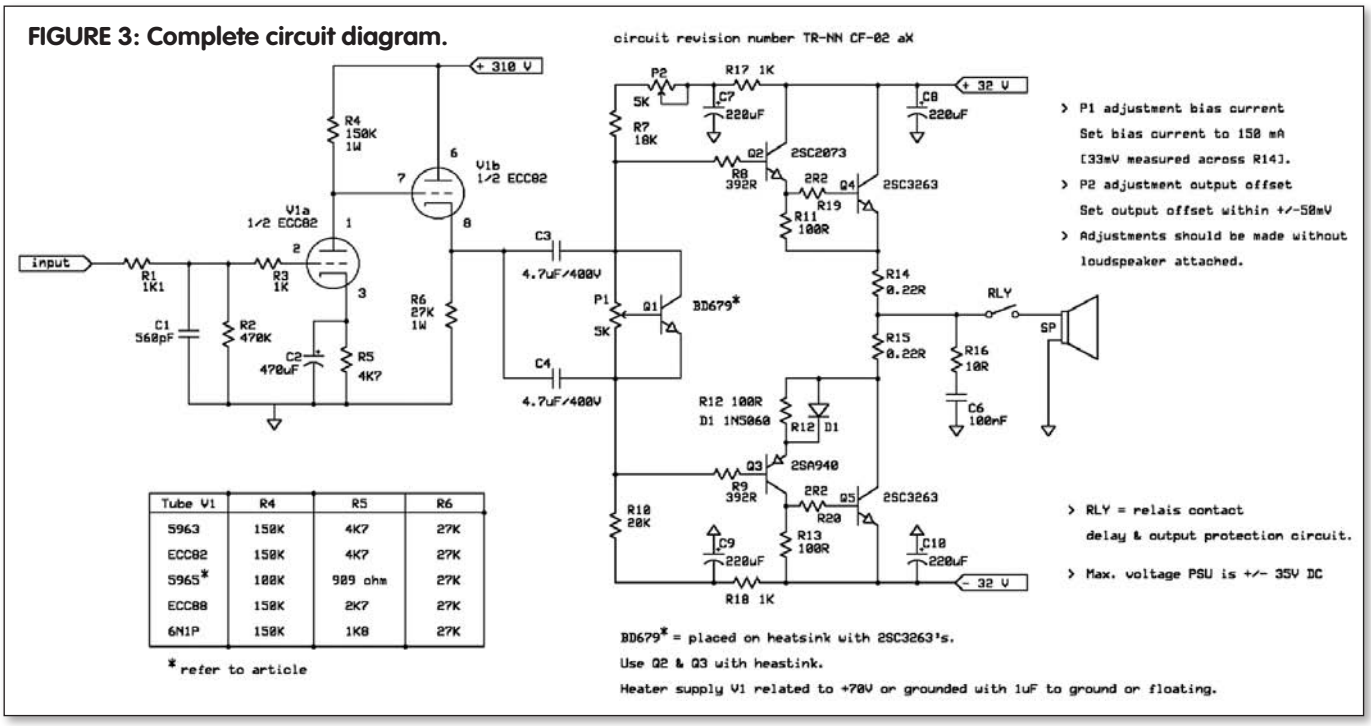

Tube V1	R4	R5	R6
5963	150K	4K7	27K
ECC82	150K	4K7	27K
5965*	100K	909 ohm	27K
ECC88	150K	2K7	27K
6N1P	150K	1K8	27K

*refer to article

I noticed that solid-state designs using two identical output devices (N and N) sounded great. Just a coincidence? I recall a contest in the Japanese *MJ* magazine in which the first-prize winner was a low-powered transistor amplifier, using an N - N output configuration. In a former project I used the LM3875 power device with its N-N output configuration in a two-way active loudspeaker with great success.

Amplifier manufacturer Naim uses this topology in all of its designs. To quote Julian Vereker of Naim Audio: "NPN and PNP power transistors are only really as equivalent as a man and a woman of the same weight and height."

In the early years complementary P channel transistors were expensive and did not equal the characteristics of an N channel device. These days, complementary transistors are very common, though I believe the N-only output stage is the better choice and will give better sonic results.

As mentioned, I chose the widely used high-performance multi-emitter LAPT power devices by Sanken, the 2SC3263. I bought original devices for less than 4 euros each. However, you could choose the 2SC3519/A, 2SC5200, MJL3281A, or MJ15003. The 2SC3263, 2SC3519/A, and the 2SC3284 are identical devices in TO3-P packages, all made by Sanken, with only the voltage ratings different. I have used the 2SC5200 with great success.

For the driver devices, I chose audio-grade driver transistors by Toshiba, the 2SA940 and the 2SC2073, which sell for only about 1.50 Euro each and are widely used in many designs. You could also use the MJE15030 and MJE15031, which should work just fine, though I didn't try these.

I added a 392Ω resistor in series with the base of the driver transistor to enhance stability. I found that using a low

AUDIO TRANSFORMERS

AMERICA'S PREMIER COIL WINDER

Engineering • Rewinding • Prototypes

McINTOSH - MARANTZ - HARMAN-KARDON
WESTERN ELECTRIC - TRIAD - ACROSOUND
FISHER - CHICAGO - STANCOR - DYNACO
LANGEVIN - PEERLESS - FENDER - MARSHALL
ELECTROSTATIC TRANSFORMERS
FAIRCHILD 660/670 RCA LIMITERS
WE DESIGN AND BUILD TRANSFORMERS
FOR ANY POWER AMPLIFIER TUBE

PHONE: [414] 774-6625 FAX: [414] 774-4425
AUDIO TRANSFORMERS
185 NORTH 85th STREET
WAUWATOSA, WI 53226-4601
E-mail: AUTRAN@AOL.com

NO CATALOG CUSTOM WORK

Zo wave generator as driver source—instead of the tube driver circuit—caused the output stage to oscillate. With the 392Ω resistor, the current section was stable under all circumstances, so I also placed small resistors on the order of 2.2Ω in series with the bases of the output devices.

The drivers should be using some kind of heatsink; the circuit board is made in such a way that the drivers are mounted on the main heatsink. If you don't use the circuit board, you should give them each a small heatsink, such as a 6 to 8° C/W type.

Mount all transistors so they are electrically isolated from the main heatsink and from each other; use dedicated isolation pads and isolated rings. I have good results with the so-called SIL_PAD 2000 insulators. I added the Baxandall diode D1 to produce a better output symmetry. I chose the 1N5060, but you could use either a 1N4001 or 1N4148.

For thermal compensation of the output transistors, I used a Darlington transistor (Q1), which you should mount near the output devices on the main heatsink. With this little circuit, the amplifier is very stable at all levels.

Bias current of the output stage is set to 140mA using P1. With slider P1 to the collector of Q1, you will achieve minimal bias. You should measure about 30mV across one of the emitter resistors.

Using P2, you can set the DC output voltage of the amplifier to zero (any value within + and - 50mV is acceptable). Make adjustments without any load attached and repeat them some time after the amplifier is switched on.

Distortion of the transistor output circuit is not measurable with my existing equipment. The tube driver circuit causes the distortion of the overall amplifier. I added the two RC combinations (R17/C7 and R18/C9) because without these I noticed some hum at the output; with these extra filters it is really quiet. R1 and C1 form a low-pass filter section, which gives the amplifier rolloff at 105kHz (at –1dB) and makes the amplifier more reliable and less critical.

To make this amplifier design more versatile, you might add a 4μH coil in series with the output of the amplifier. This output conductor could be 16 turns of 0.75mm enameled copper wire wound on a 6.3mm drill bit. A 15Ω 2W resistor should be located within the coil.

You should consider the use of a DC protection and power-up circuit. Several manufacturers offer kits.

The amplifier design presented here exhibits no problems at power-up or switch-off because of the cathode follower. At power-up the cathode starts at 0V and increases to approximately +120V DC.

If you choose a kit, you might consider the Velleman K4700 Speaker Protection Kit, which sells for only 20 Euros. The kit provides a 6-second delay after switch-on to avoid any thump as the amp comes up and, as soon as the amplifier is switched off, it disconnects the speakers to prevent any switch-off thump. It also provides DC protection by disconnecting the speakers if DC is more than about ±700mV. This kit uses its own mains transformer. The delay time of the Velleman kit is increased to 12 seconds by changing C11 to 470μF.

CIRCUIT BOARD

You could hard-wire the tube driver stage using a little tagboard; a printed circuit board for the transistor power output section should be mandatory, in terms of reliability. The prototype stereo circuit board shows a section for the coupling capacitors, but there are so many different shapes and sizes the final board is made without any space for the coupling capacitors. The final circuit board is intended for one channel only (**Fig. 4**).

For local bypass, I added capacitors C7/C8/C9/C10 to the circuit board. Space for these capacitors is limited, so use the 10mm or less in diameter types, which will fit nicely.

The heatsink I used was taken from a 20-year-old amplifier. In fact, you can use almost any heatsink provided it is not too small, a 0.7 K/W would be a good choice. Bias current is limited for this Sony heatsink to 130mA [28mV measured across an emitter resistor], to reduce heat dissipation.

The original layout of this circuit board is available to you. Please install the so-called Sprint Layout Viewer on your computer. You can find this program on my website. Using this Viewer, you can view and print the original circuit board file.

FIGURE 4: Circuit board layouts.

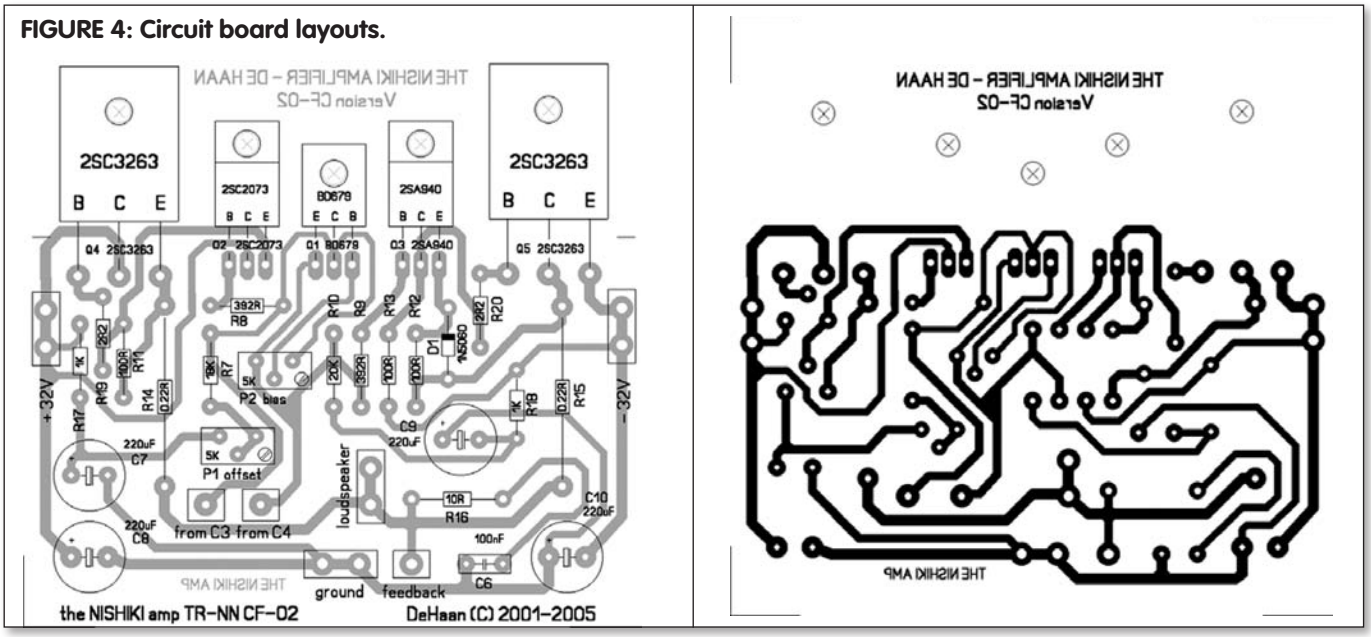

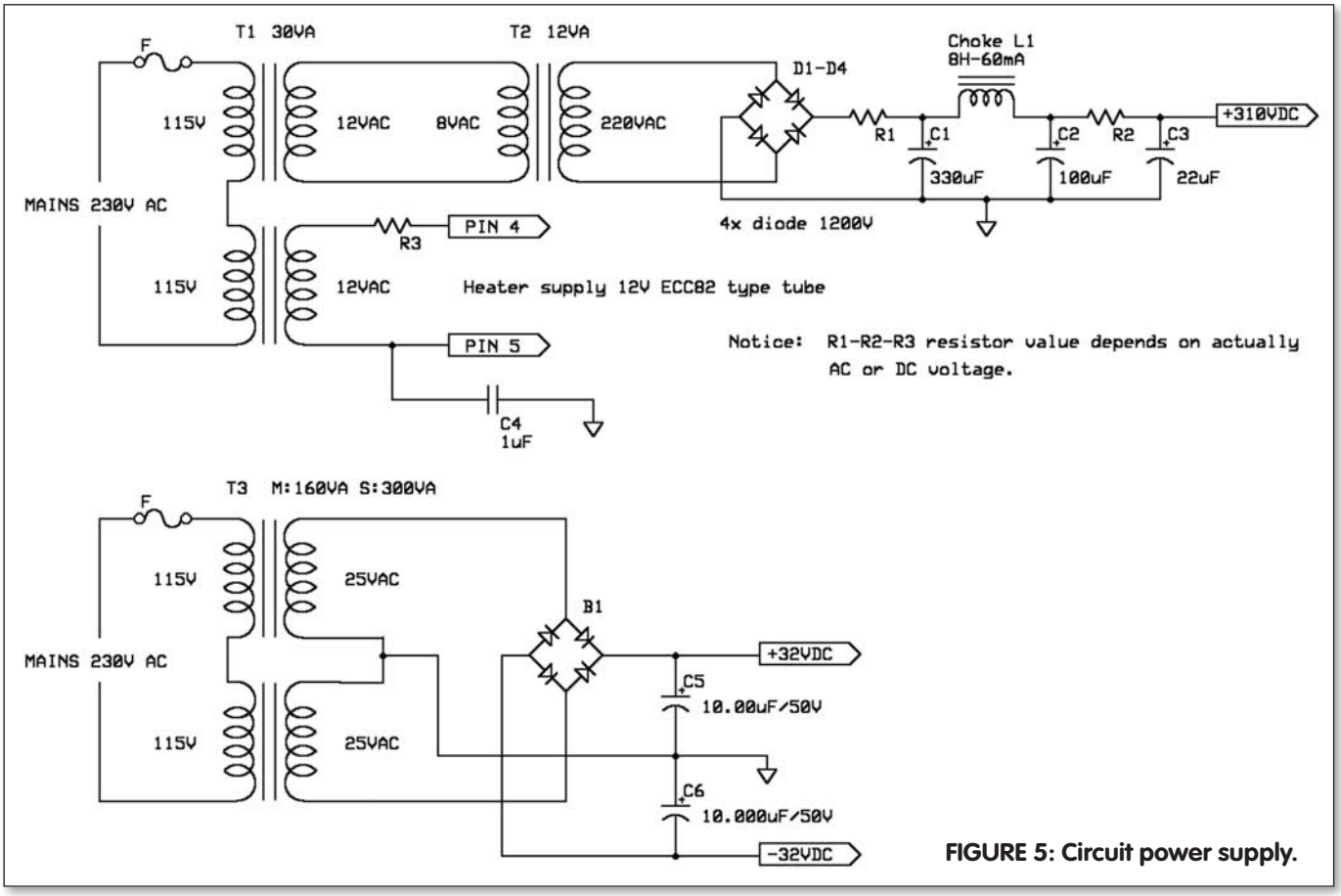

FIGURE 5: Circuit power supply.

For those who are interested, a professional circuit board might be available. Please inquire at the above-mentioned website. For stereo you will need two boards.

POWER SUPPLY UNIT (PSU)

The driver circuit runs at +310V DC with a 6 or 12V as heater supply. The output power stage runs at ±34V DC, because of the original Sony mains transformer. At full load the DC voltage will be as low as ±30V DC using this mains transformer. I am not familiar with the power ratings of this transformer.

In case you need to buy a new mains transformer, purchase a 25V + 25V AC type. This voltage will yield ±32V DC, which is perfect. I would not recommend a higher voltage than approximately ±35V DC with ±40V DC as maximum, because power limitations and heat dissipation with a 4Ω load will be more critical, also because the driver is intended for ±32V DC use.

As heater voltage, I chose 12V instead of the more common 6.3V. The power supply circuit will make clear why this was done (**Fig. 5**). Two small mains transformers in cascade provide both the high volt-

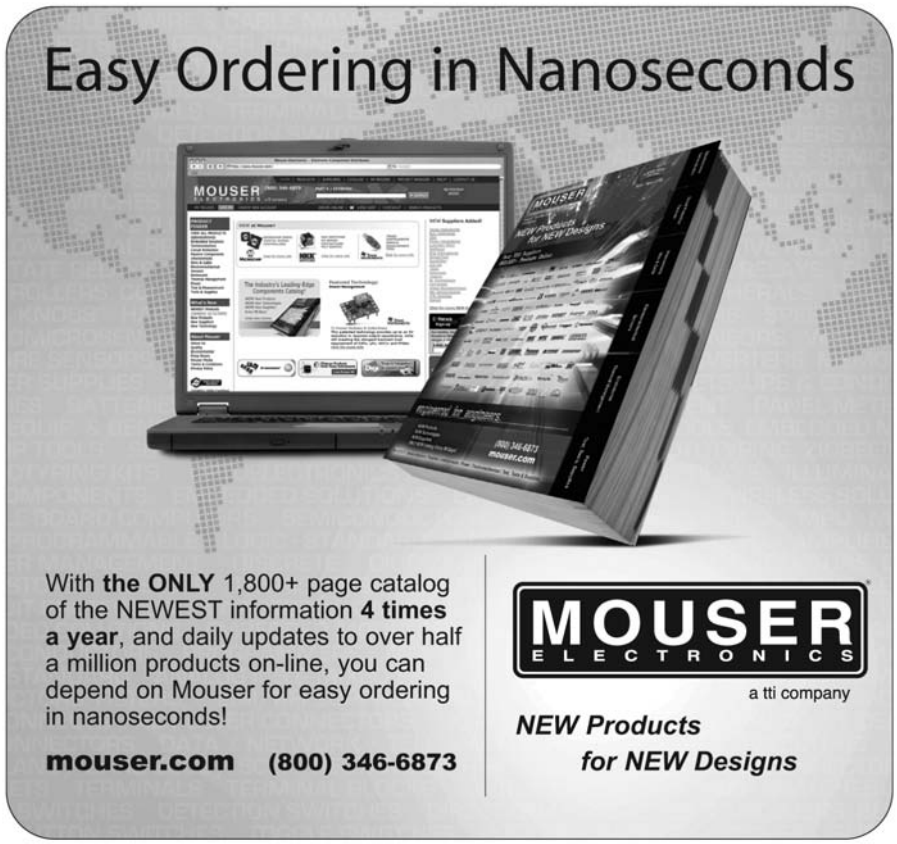

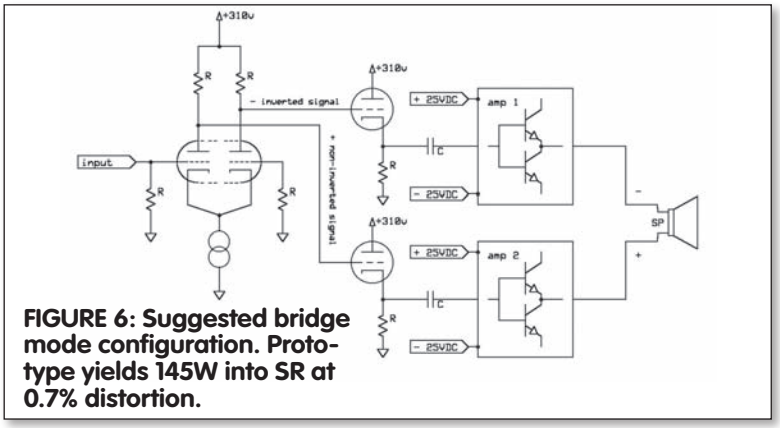

FIGURE 6: Suggested bridge mode configuration. Prototype yields 145W into SR at 0.7% distortion.

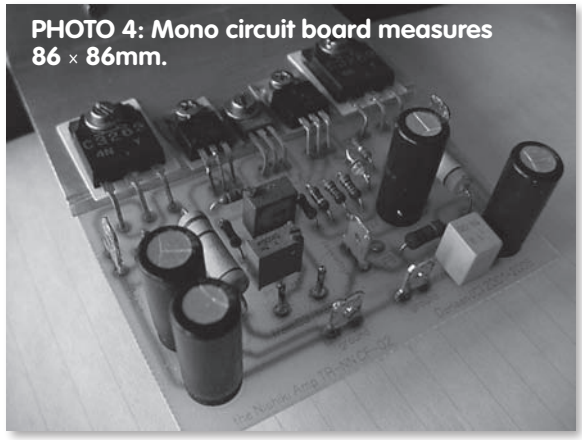

PHOTO 4: Mono circuit board measures 86 × 86mm.

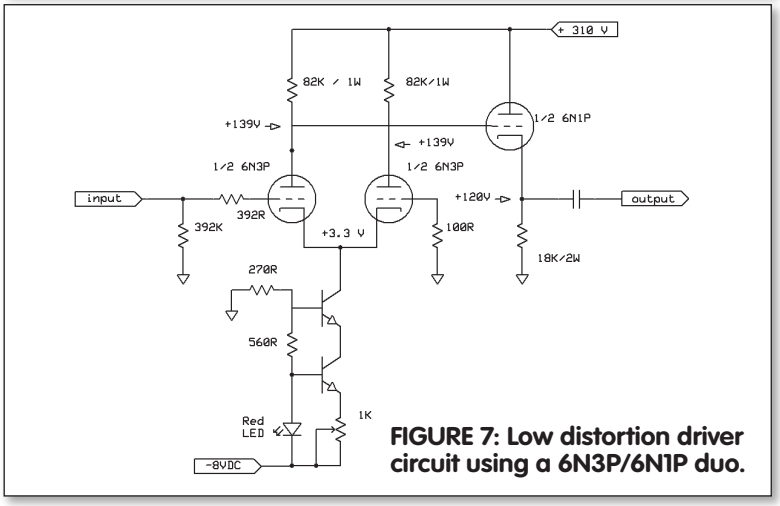

FIGURE 7: Low distortion driver circuit using a 6N3P/6N1P duo.

PHOTO 5: External power supply.

age you need and the heater voltage. Of course, you could use a dedicated mains transformer intended for tube use.

The used mains transformers T1 and T2 are very common and rather inexpensive. I used an 8V transformer because it was available; a 9V works fine as well.

One section of transformer T1 is used for the high voltage section and the other section as heater supply. The 5965, the ECC82, and 5963 tubes use pins 4 and 5 for 12V heater voltage use. In case you use the ECC88 or the 6N1P, you can wire the two 6.3V heater wires of the tubes in series for 12V use. The heater is grounded by a 1µF capacitor; in this way the maximum cathode-heater voltage is not an issue and it's grounded. You might consider using a voltage resistor divider to relate the heater to, say, +70V instead of capacitor grounding.

For choke L1 you could use a Hammond 156L or a 156M type, which are only $11 US, or C1 and C2 could be lower in value.

R1 and R2 trim the DC high voltage to +310V. I used a link (0Ω) and a 1k resistor for R1 and for R2 with the tubes working. This is also the case for R3, which trims the heater voltage to 12.6V. The power supply for the current transistor power stage is straightforward. I used one single bridge rectifier and two large capacitors. It is up to you to decide whether to use one PSU for two channels or to give each amplifier its own power supply. For mono you use a 160VA transformer with 120VA as a minimum; for stereo a 300VA will do just fine.

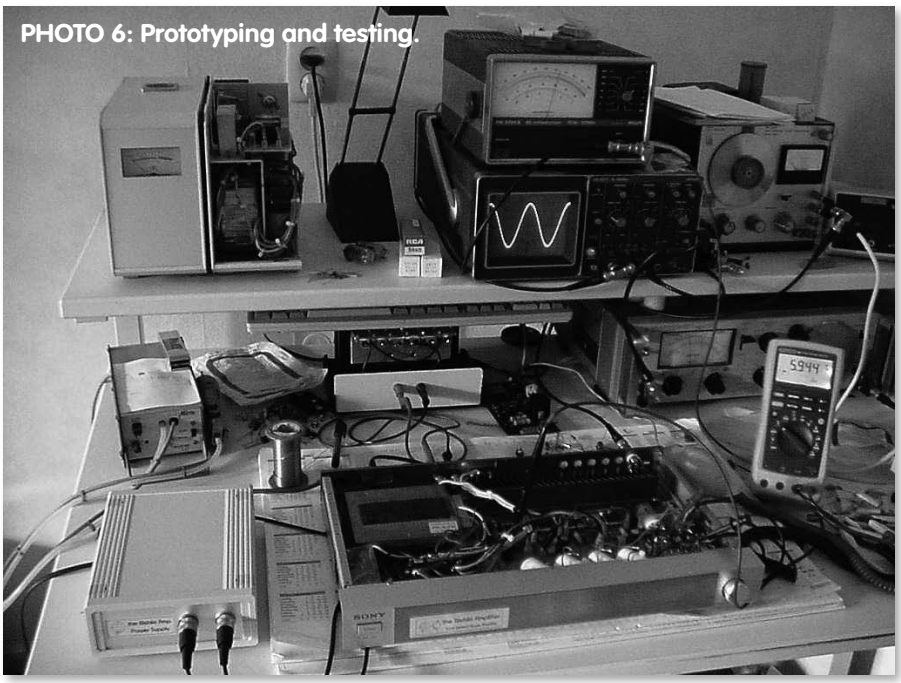

PHOTO 6: Prototyping and testing.

THE REAL WORLD

I used a 20-year-old Sony TA-AX2 integrated amplifier as the "donor" for this

project. I used the original enclosure, the original buffer capacitors, the heatsink, and the mains transformer from this 2 × 35W amplifier, thus reducing the cost of this project enormously.

I took out the original Sony circuit board, including the STK module, and used a stainless-steel plate to cover the original holes of the switches and potentiometers on the front. I left the volume potentiometer in place.

I bought this Sony amp for just 10 euros, not knowing whether it worked. Because of its very slim design (height front is just 4.5cm, inside just 4cm), heater and high voltage supply need to be external.

You could use almost any secondhand amplifier. A 35 to 50W into 8Ω amplifier will do, and will run at approximately the required ±32V DC. Amplifiers with higher output (into 8Ω) run at higher DC PSU voltages; this is overkill, because the driver stage has its limitations.

FINAL WORD

During testing and prototyping, the amplifier turned out to be very reliable, though shorting the outputs is not recommended. The final amplifier has been running now for a long time without any problems. In spite of a design using a low component count, specs and sound are convincing.

I am very pleased with the final result. By using an old amplifier for the enclosure and several main parts, I was able to keep overall costs to approximately 100 euros.

The sound is pleasant and entertaining, balance and soundstage are good. Voices and percussion, for example, are clear and never nasty or bright. It's fun to listen to, and the slim-line Sony enclosure looks good, too. Sometime during the prototyping, I used the 5965 and Audyn Cap Plus coupling capacitors and was very disappointed with the sound results—bright, no dynamics, no drive.

My DIY Dynaudio loudspeaker using the Esotar tweeter and the 17W75XL04 can sound great, but it can also sound not that pleasant and boring. My favorite Keith Jarrett music is a difficult job for many systems; to revolve all the magic it needs some attention. For example, in *Ecstasy* from *Changeless* there was simply no magic and it was not a pleasant listening experience. But by changing tubes and coupling capacitors, I ended with something I enjoyed.

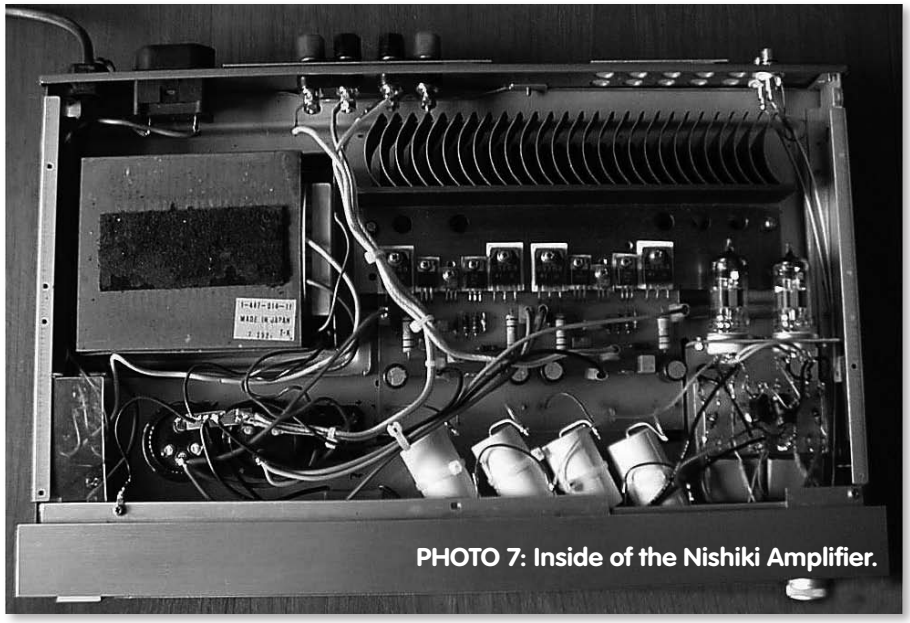

PHOTO 7: Inside of the Nishiki Amplifier.

Another example is "Young and Foolish" from *Live at Village Vanguard* by jazz pianist Brad Mehldau. Strange recording I thought, and it is. However, it contains many pleasant and good elements. Using the final configuration, I understand so much more of this live recording. It is a beautiful concert, and even at the end you hear the hammer mechanism very clearly without making a string sound. I love music in this way! Also, Warren Bernhardt's Ain't Life Grand [DMP CD-478], track 2 + 8 shows what this amp is capable of.

The DAC used is based on a Crystal CS4329 evaluation board with an Arcam

Test Equipment Depot

800.996.3837

The source for premium electronic testing equipment

New & Pre-Owned

- Oscilloscopes
- Power Supplies
- Spectrum Analyzers
- Signal Generators
- Digital Multimeters
- Network Analyzers
- Function Generators
- Impedance Analyzers
- Frequency Counters
- Audio Analyzers

Call now to speak to one of our knowledgable salespeople or browse our extensive online catalog

www.testequipmentdepot.com

• Sales • Repair & Calibration • Rental • Leases • Buy Surplus

A Winding Path
There is no music on a record!
Just a winding path of vertical
and lateral amplitude waves.
The time signature comes from
the spinning turntable platter.
Modern disc cutters can achieve
Wow and Flutter of 0.01%.
Shouldn't your turntable
do as well?
The
Audiophile Standard
KAB
Preserving The Sounds
Of A Lifetime
www.kabusa.com

Ready, willing
and
AVEL

offering an extensive
range of ready-to-go
toroidal transformers
to please the ear, but won't
take you for a ride.
Avel Lindberg Inc.
47 South End Plaza
New Milford, CT 06776
tel: 860-355-4711
fax: 860-354-8597
www.avellindberg.com

170.3 CD transport using a balanced digital interlink connection. I employ Monster M1000MK3, IXOS 1004, and OCOS cables for the analog sources. The amplifier uses SED 6NIP tubes and ClarityCap coupling capacitors. αX

REFERENCES

1. John Linsley Hood, *Valve & Transistor Audio Amplifiers* (ISBN 0750633565).

2. *Electronics World + WW magazine* [UK], Nov. 1993, "Distortion in Power Amplifiers Chapter 4," by Douglas Self.

3. Velleman Kits, www.velleman.be.

4. ClarityCap capacitors, www.icwltd.co.uk and www.e-speakers.com.

5. ExpressSCH—all circuits/schematics drawn using this freeware program—www.expresspcb.com.

6. Sprint-Layout 4.0—Circuit board layout drawing program—www.abacom-online.de.

e-mail: wim@wdehaan.demon.nl
website: http://www.wdehaan.demon.nl/

[Copying or distributing this article—such as posting on a website or online forum—is prohibited without written permission from author or publisher.]

TABLE 2: Component List

Amplifier component values

R1	1k1	600mW	metal film 1%
R2	470k	600mW	metal film 1%
R3, R17, R18	1k	600mW	metal film 1%
R4	150k	1W	for ECC82 only, refer to article
R5	4k7	600mW	for ECC82 only, refer to article
R6	27k	1W	
R7	18k	600mW	metal film 1%
R8, R9	392 R	600mW	metal film 1%
R10	20k	600mW	metal film 1%
R11-13	100 R	600mW	metal film 1%
R14, R15	0.22 R	4W	Intertechnix MOX resistor
R16	10 R	1W	
R19, R20	2.2 R	600mW	metal film 1%
P1, P2	5k	0.5W	3/8″ trimmer TY type
C1	560pF		polystyrene
C2	470μF	16V	Panasonic FC
C3, C4	4.7μF	400V	ICW ClarityCap SA-type
C5	not used		
C6	100nF		Vishay MKP 1837
C7-10	220μF	50V	Panasonic FC (OD 10mm)
V1	ECC82	for 5963, 6189, 5965, ECC88, or 6N1P refer to article	
Q1	BD679	darlington transistor used for temp. compensation	
Q2	2SC2073	can be replaced with MJE15030	
Q3	2SA940	can be replaced with MJE15031	
Q4, Q5	2SC3263	can be replaced with 2SC3519, 2SC3519A, 2SC3284, or 2SC5200	
D1	1N5060	can be replaced with 1N4148 or 1N4001	

Power supply PSU component values

T1	12V + 12V	30VA	mains transformer
T2	8V	12VA	mains transformer
T3	25V + 25V	M: 160VA S: 300 VA	mains transformer
		M: mono S: stereo	
D1-4	HV diode	1200V	
B1	400V – 20A		bridge rectifier
R1-3	n/a	to be determined in circuit – refer to article	
C1	220μF	450V	
C2	100μF	450V	
C3	22μF	450V	
C4	1μF	250V	
C5, C6	10,000μF	63V	BC 051 series
L1	8H – 60mA	choke	Hammond 156L or 156M type

TABLE 3: Specifications

Distortion at 5Ω load*
using original Sony mains transformers and 2× 6800UF PSU capacitors

Tube	1W	5W	20W	45W	51W	60W	total gain
	distortion in %						
ECC82 Sylvania	0.18	0.15	0.12	0.22		0.66	21dB
5963 RCA	0.18	0.12	0.14	0.32		0.70	20dB
5965 RCA	0.48	0.42	0.74	0.8	0.9		30dB
5965 10dB feedback	0.12	0.16	0.32	0.40		0.44	20dB
ECC88 Lorenz	0.17	0.18	0.20	0.22		0.5	27dB
ECC88 JJ Electronic	0.18	0.18	0.20	0.22		0.32	27dB
6N1P SED/Svetlana	0.3	0.32	0.5	0.54		0.58	28dB

*Notice: at 60W output power the DC voltage of the power supply measures approximately ±30V DC.

Frequency range: 10Hz – 105kHz at –1dB/1W
Damping: 10
Sensitivity: depends on tube, check out the Total Gain section

Equipment used:
Philips PM2454B AC millivoltmeter 10Hz – 12MHz
Fluke 187 True RMS multimeter and Fluke 45 dual display multimeter
Philips PM 5125 sine/square wave generator 10Hz – 1MHz
Philips PM3211 oscilloscope 0 – 15MHz
Hewlett-Packard 333A distortion analyzer

Look!!

Click http://www.eifl.co.jp
or send e -mail to info@eifl.co.jp
for more products information

- ASANO AMP KIT
- STAX
- SONY (QUALIA 010-MDR1)
- audio-technica
- KOETSU
- DENON
- TANGO(ISO)
- TAMURA
- HASHIMOTO (SANSUI)
- FOSTEX
- JAPANESE AUDIO BO

E·I·F·L EIFL Corporation
1-8, Fujimi 2-chome, Sayama City, Saitama Pref. 350-1306 JAPAN.
Phone:+81-(0)4-2956-1178 FAX:+81-(0)4-2950-1667
E-mail:info@eifl.co.jp
Wire Transfer:MIZUHO BANK, SWIFT No.MHBKJPJT a/c # 294-9100866

NEW REPRINT FROM OLD COLONY SOUND LAB

Electric Guitar Amplifier Handbook

By Jack Darr

New reprint of the 4th edition of this book, originally published in 1973. Contains three sections—'How Guitar Amplifiers Work,' 'Service Procedures and Techniques,' and 'Commercial Instrument Amplifiers.' Everything you need to know about how each part of the amp works and what to do about it if it doesn't work. The final section of the *Handbook* is full of schematics for many of the guitar amplifiers in use at the time including models from Ampeg, Bogen, Baldwin, Fender, Gibson, Gretsch, and others. Line drawings and photos. 2006, 1973, 384pp., softbound, ISBN 1-882580-48-6. Sh. wt: 3 lbs.

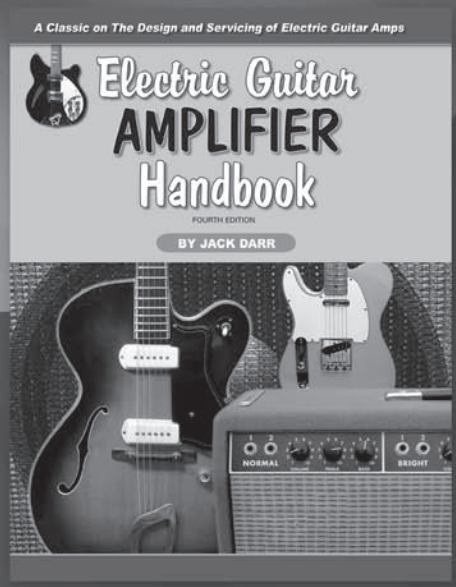

BKAA69 $29.95*
*Shipping & Handling additional

To order call 1-888-924-9465 or order on-line at www.audioXpress.com

Old Colony Sound Laboratory, PO Box 876, Peterborough NH 03458-0876 USA
Toll-free: 888-924-9465 Phone: 603-924-9464 Fax: 603-924-9467
E-mail: custserv@audioXpress.com www.audioXpress.com

Adcom GFP-555 Preamp Upgrade

In the best tradition of DIY audio, this author's modifications significantly upgrade a proven preamp design.

By Charles Hansen

I modified my Adcom GFP-555 in a manner similar to Gary Galo's GFP-565 project in his series of articles in *audioXpress*[1-5]. I did not do a "purist" upgrade like Gary—I kept the tone controls, which now supply a new set of output jacks, and all the available inputs but with an upgrade to gold jacks. I changed the tone control op amp from the original NJM2041 to the OPA2604. The LAB and NORM outputs are now both DC-coupled. I also removed the headphone amplifier, which was a mediocre design with an NJM4556 op amp, so I decided to save the available watts for the new AD744/AD810 output stage, which draws a lot of current. The GFP-555 has even higher gain (22.5dB) than the 565, so the volume control wiper is well down at normal listening levels.

The lower 14dB gain of Gary's line stage was a welcome change. The AD744/AD811 line stage was a bit more difficult to install because the -555 does not have the dual-composite op amps that the -565 has. Victor Campos recalled that the -555 was probably designed by Nelson Pass before Victor arrived at Adcom.

While I did not use an external power supply, I did upgrade the power supply, changing to a 36V CT 2A secondary, with a copper flux band and steel end plates. I fit in the larger transformer by removing the line voltage selector switch and its extra wiring.

FIGURE 1: Block diagram comparing original with modification.

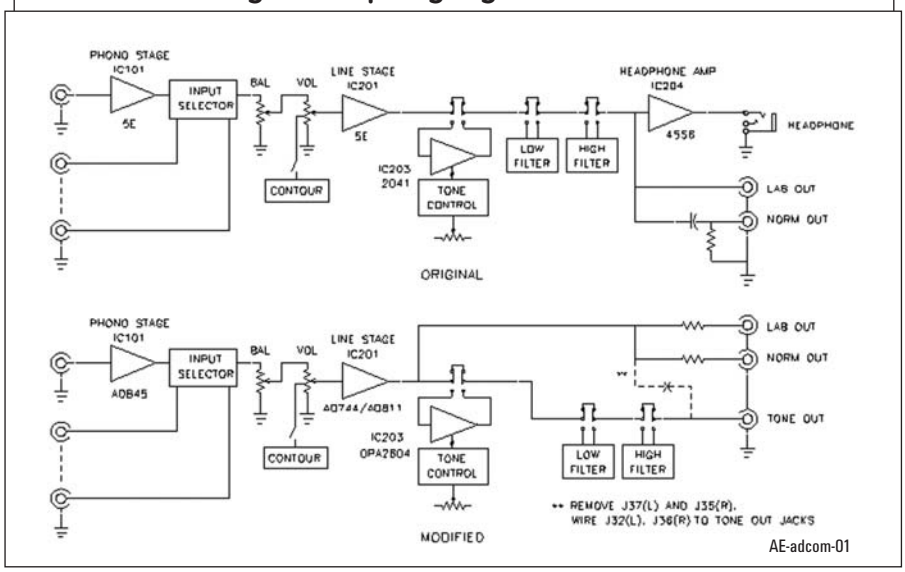

FIGURE 2: Power supply schematic.

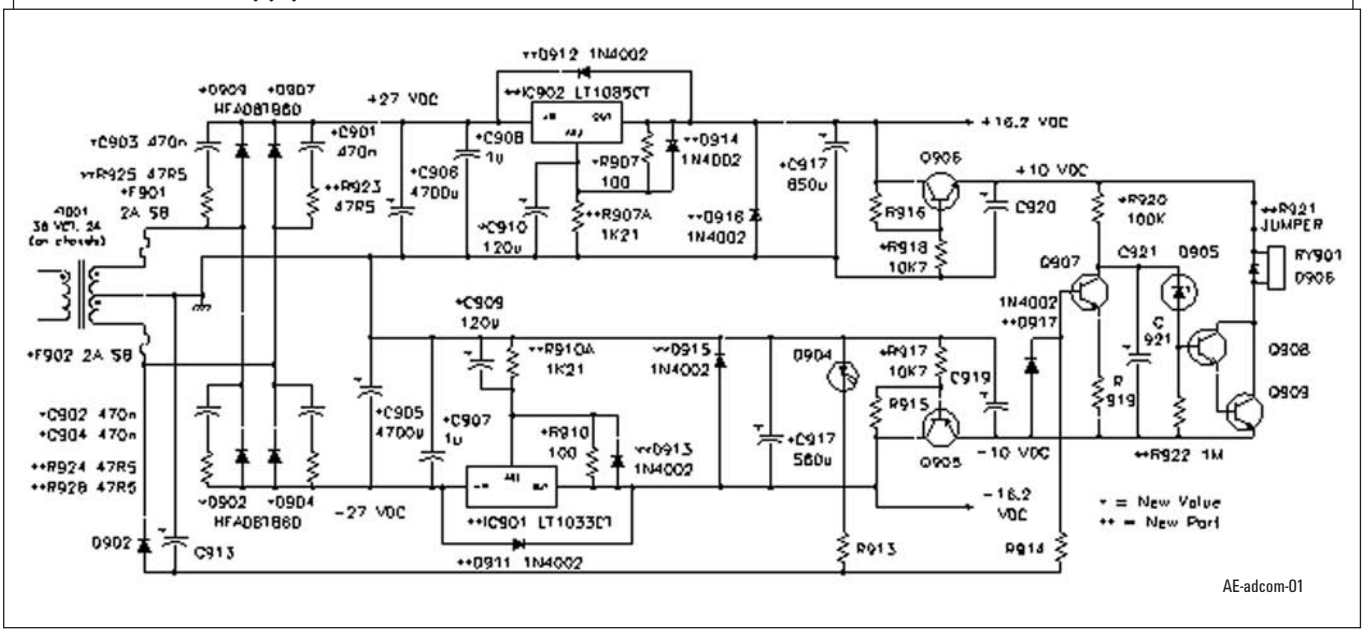

I kept two of the existing plastic dual-dual phono jack modules, which make a desirable mechanical connection between the PC board and the rear panel. These are the Tuner In/Tape 1 In pair and the Signal Processor In/Out pair. The former two will be active, while the Processor pair will be strictly mechanical and bypassed with jumpers.

Parts cost for this upgrade was about $115, based on the parts list in **Table 1**. I happened to have the GFP-555, but I recommend using the –565 if you are considering this type of upgrade. Follow Gary's articles for the purist version, but for a "less-than-purist" modification that retains the original I/O flexibility of the Adcom design, this article will provide guidelines.

I strongly suggest you obtain the service manual, for the model of preamp you are modifying (readily available as reprints on eBay). I mapped all the PC board jumpers onto the schematic so I could replace them with discrete components where necessary. I must thank Gary Galo for his comments on my proposed modifications; he was very helpful and provided some interesting insight into the Adcom preamp designs of that era.

MODIFICATIONS

Prior to making any modifications, I verified all the DC voltages shown on the schematic (it had sat unused for a few years), checked that all the controls and input/outputs were functional, gave the Adcom a listening session, and made a few measurements.

Figure 1 shows block diagrams for the original GFP-555 and for my modifications. In both cases the CD, Tuner, Tape 1, Tape 2, and Video/Aux inputs are processed through the Listening input selector switch, with the phono preamp section providing one of the inputs. There was also a separate Recording selector switch that coupled to the Tape 1 and Tape 2 tape loop jacks.

Audio signals proceed from the input switch to the Signal Processor I/O jacks, which are furnished with removable metal links. The next step is the Balance control, the Mono/Stereo switch, and the Volume control, which is equipped with a Contour switch to the tapped volume control that could select the loudness contour function for low listening levels. Finally, the selected audio signal was sent on to the active line stage.

The output of the line stage can then take a number of series paths. When the tone controls and filters are bypassed, the line stage is direct-coupled to the LAB output and capacitively-coupled to the NORM output. The headphone amp input receives this same signal. Three additional switches in the line output

PHOTO 1: GFP-555 original power supply rear.

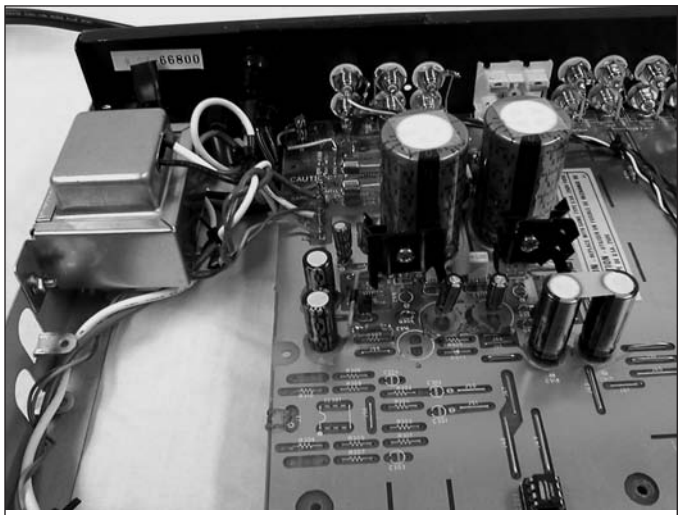

PHOTO 3: GFP-555 mod power supply rear.

PHOTO 2: GFP-555 original power supply front.

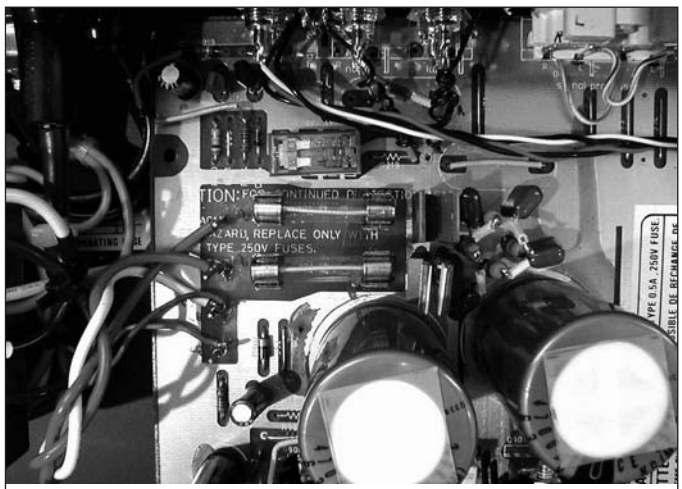

PHOTO 4: GFP-555 mod power supply front with new transformer.

signal path allow selection of the tone controls—a Lo filter and/or a Hi filter.

The original phono preamp and line stage ICs had a house number, "5E," which Victor thought was an OP37. This would make sense, because the OP37 is one of the few op amps whose maximum supply rail voltage was ±22V, and the Adcom schematic shows the 5E operating on ±21.5V rails. On the other hand, Gary observed that with the phono gain switch set to the lower gain position, the circuit does not satisfy the gain-of-5 stability requirement of the OP37, so maybe the "5E" was an OP27.

The modified block diagram at the bottom of **Fig. 1** is essentially the same up to the output of the line stage. At this point the amplified signal takes two distinct paths. The first is direct-coupled to both the LAB and NORM output jacks. The second path uses all the switched tone control and filter circuitry of the original unit, but goes to another set of output jacks that I added called Tone Out.

You can also see that I changed all the ICs to reflect improvements made over the intervening years. The phono preamp went from the 5E to an AD845. I replaced the line stage 5E with the aforementioned AD744/AD811 composite amplifier. The NJM2041 tone control IC became an OPA2604. Finally, I removed the 4556 headphone amplifier and all its passive parts, although I left the jack in place on the front panel. I tried unsuccessfully to fit my Headroom headphone module board[6] in the space between the transformer and the front panel.

POWER SUPPLY

Gary used a separate power supply chassis for his GFP-565 modification, which has the distinct advantage of lower phono stage hum and noise. However, I wanted to retain a one-box preamp. The original power supply regulators were composed of discrete transistors Q901 and Q902 that used ±32.5V raw DC rails to derive the ±21.5V DC op amp rails. Another set of transistor regulators, Q905 and Q906, further stepped this down to ±15.6V DC for the headphone op amp, and provided 31.2V DC for the output delay relay circuit.

Photos 1 and **2** show the front and rear views of the original supply. In the foreground of **Photo 1** I have already removed the components for the headphone amplifier.

My modified power supply is shown in **Fig. 2**. After mapping all the jumpers onto the schematic, I replaced all the power supply jumpers with larger wire gauges. Next, I removed all the power supply components from the PC board and I replaced the Jamicon bulk filter caps with Nichicon KZ and Panasonic HFQ types. I used LT1085CT and LT1033CT linear regulator ICs for the new ±16.2V DC op amp power supply rails.

Because the delay relay has a 24V coil, there was no need for 31.2V DC. The original design used a 274Ω series resistor to drop the coil voltage to 24V. I removed the resistor and dedicated Q905 and Q906 to a reduced ±10V DC, which saved some power dissipation in

FIGURE 3: Phono preamp schematic.

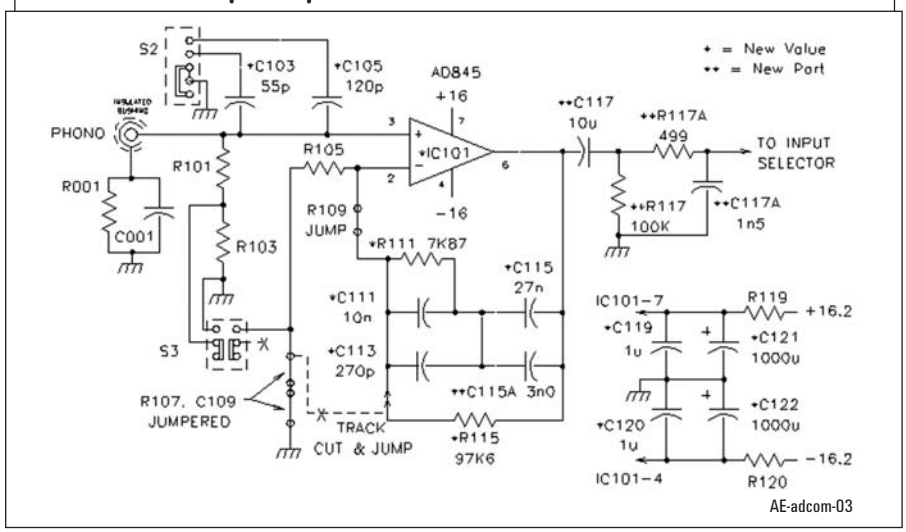

FIGURE 4: Line stage schematic.

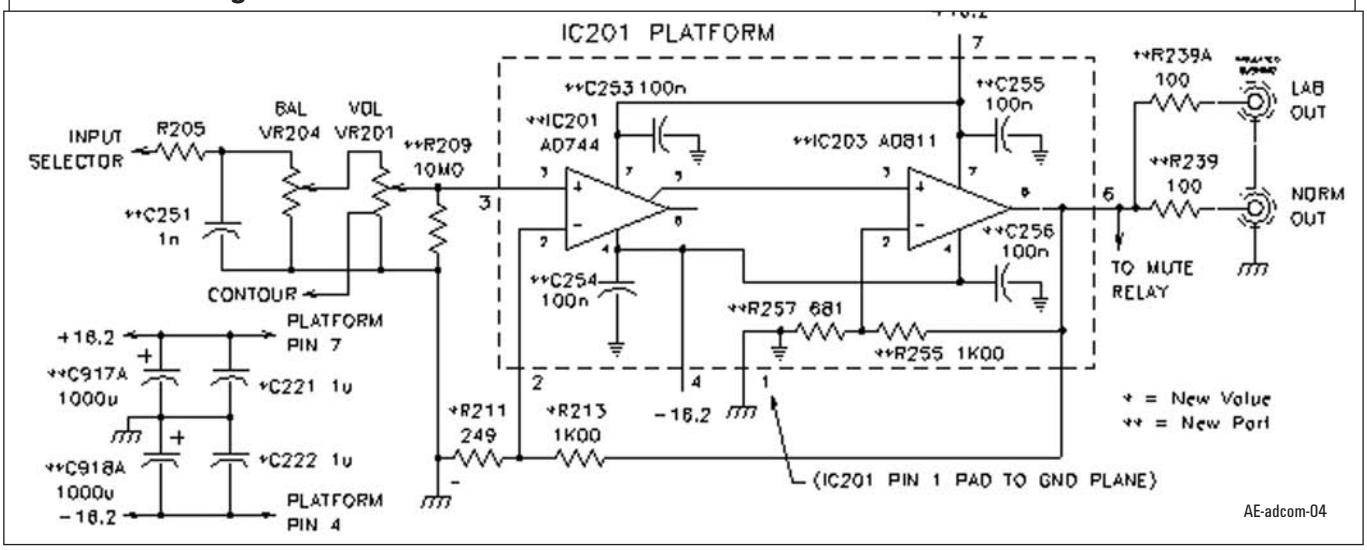

the relay coil. Gary increased the relay time delay, whereas I left it the same.

Photo 3 shows the front view of my new power supply. I placed adhesive-backed Mylar film across pairs of aluminum capacitors to provide them some additional mechanical ruggedness. The new transformer is on the left side. Note the TO-220 heatsinks mounted on the linear regulators. These are needed because of the higher current drawn by the AD744/AD811 composite line stages.

I installed the new Hex-Fred diodes in the old snubber cap holes, and the new snubber resistor/cap combinations in the old rectifier bridge holes (**Photo 4**). Two of the TO-220 diode mounting tabs were facing each other, so I placed adhesive-backed Nomex on the tabs to keep them from shorting together.

FIGURE 5: Line stage IC socket assembly.

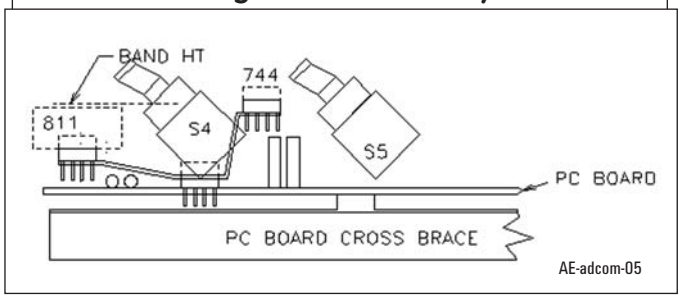

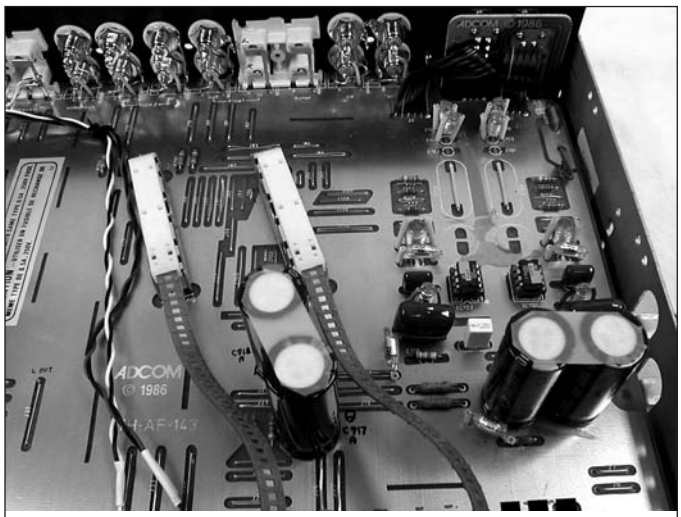

PHOTO 5: GFP-555 mod phono stage.

PHONO STAGE

The phono stage in **Fig. 3** is the one designed around the AD845 op amp by Walt Jung in Analog Devices' "Op Amp Applications,"[7] pp. 6–18. Walt also kindly provided me with two AD845KN op amps because the DIP package is no longer available (Rochester Electronics may have some NOS parts in stock). I replaced the two 1000µF Jamicon filter caps with Nichicon KZ, shown on the right in **Photo 5**.

I removed 55pF caps C101 and C1023 from the PC board and reduced the capacitor values on the cartridge capacitive load switch to 55pF and 120pF. This allowed me the choice of no capacitor, or one of the latter two values. The MM/MC gain switch remained as it was.

LINE STAGE

The line stage (**Fig. 4**) consists of the AD744/AD811 composite pair that Gary used, which is itself based on another Walt Jung design that goes back to 1992[8-10]. I isolated the LAB and NORM outputs from each other with 100Ω resistors. I also drilled holes in the PC board to add two more 1000µF Nichicon KZ power supply filter caps for the line stages (C917A and C918A). These are shown in the center of **Photo 5**.

The line stage presented a real packaging problem. Because the GFP-555 did not use composite op amp stages, there was much less real estate available for the 744/811 combination. The plastic indexing control band for the Recording switch ran right over the top of the exiting 5E op amps (**Photo 6**).

I needed to build a "flying bridge" plug-in module for the AD744/AD811 composite line amp by epoxying two 8-pin DIP sockets and an 8-pin DIP platform to a ⅛″ wide copper strip. I bent the strip upward at each end to allow the 744/811 assemblies to clear selector switches S4 and S5, and the exiting PC board components surrounding the original "5E" ICs. I grounded the copper strip via unused platform pin 1 so it formed a ground plane under the 744 and 811.

The clip-on heatsinks over the AD811s are shown on the right side in the photo. All the sockets and platforms are Garry Engineering machined low-profile gold-plated types we used in RF and switching circuit brassboards at work. A rear view drawing of the plug-in modules and their close clearances is shown in **Fig. 5**. In his newer designs[11], Walt has recommended using the AD845 in place of the AD744, but my construction was a bit too far along for that improvement because the wiring between the AD744 and AD811 was now firmly anchored in epoxy.

The tone controls, lo and hi filters, and the contour circuitry all remain the same as in the original unit, and I do not show them in this article. Of course,

FIGURE 6: RIAA response error.

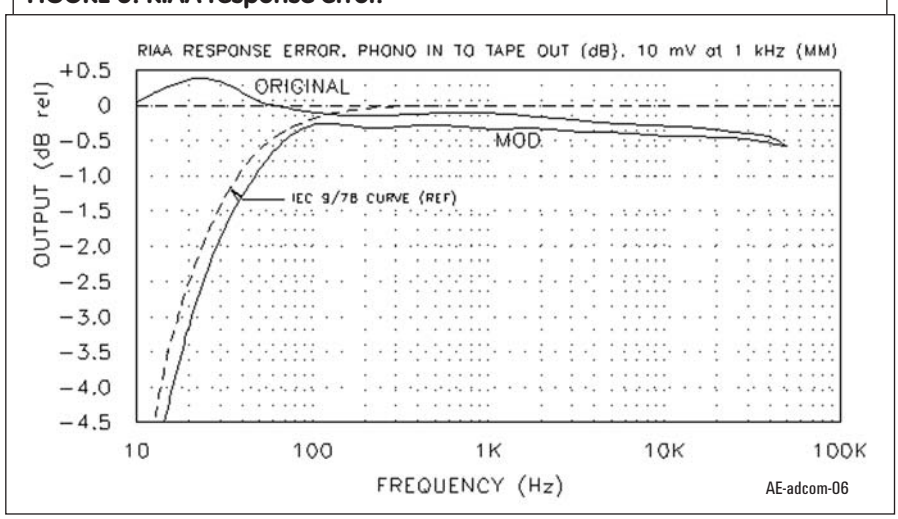

much progress has been made in IC technology and cost since the original design, although the AD744 and AD845 op amps are both listed in my 1988 ADI catalog.

LISTENING AUDITION

Gary Galo suggested that I also try the OPA627AP in the phono stage, because it has slightly lower noise specifications than the AD845 and is readily available in the DIP package, making it easier for readers to install. However, one of the weaknesses of the one-box design is the power supply noise induced by having the phono stage inside the same enclosure as the power supply, especially the power transformer. At full volume, the hiss and low-level hum were quite noticeable. Once I started the first LP and dialed down the volume to a comfortable listening level, the modified preamp proved quieter than the original by a fair margin. I could not really discern any difference in the noise level between the two candidate phono stage op amps, but I did prefer the sound of the AD845 just a bit.

The original GFP-555 phono section was a touch tubby in the bass and had a higher hiss level than the modified unit. The line inputs tended to-

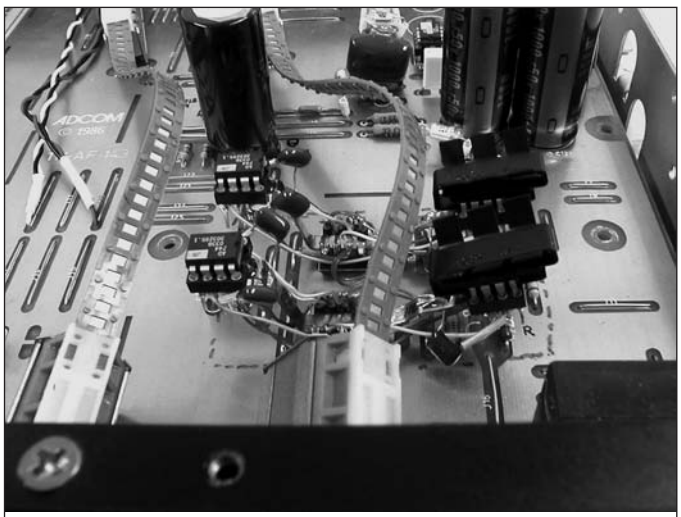

PHOTO 6: GFP-555 mod line stage.

FIGURE 7: Phono preamp 50Hz residual.

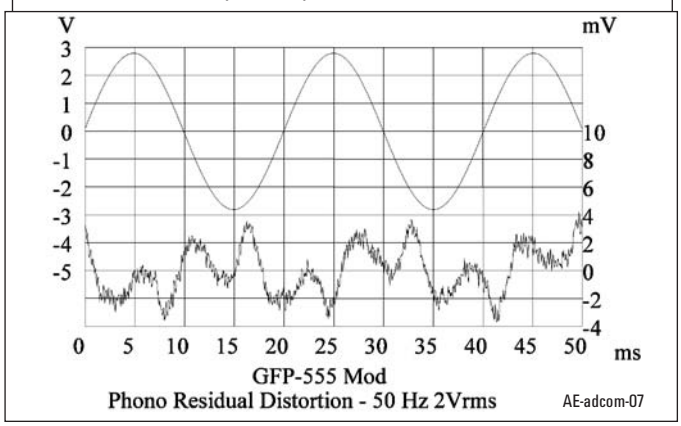

FIGURE 8: Phono preamp spectrum of 50Hz sine wave.

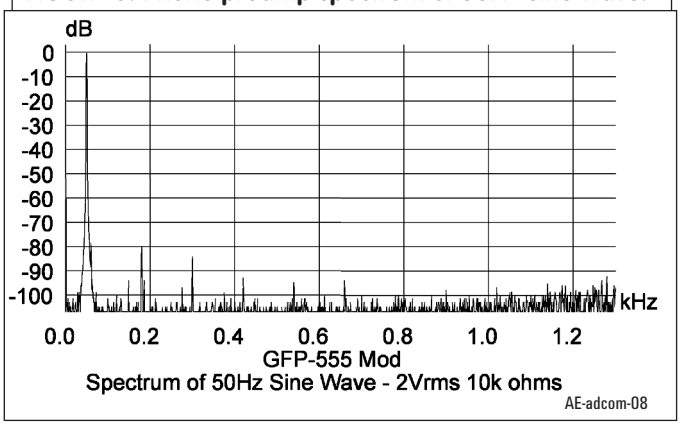

FIGURE 9: Line stage frequency response.

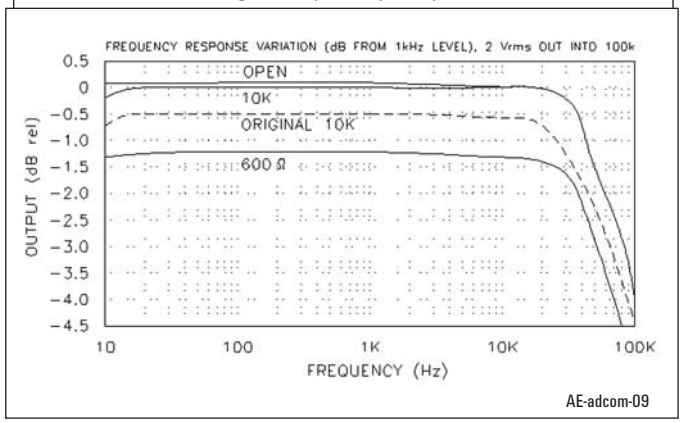

FIGURE 10: Line stage THD + N vs. frequency.

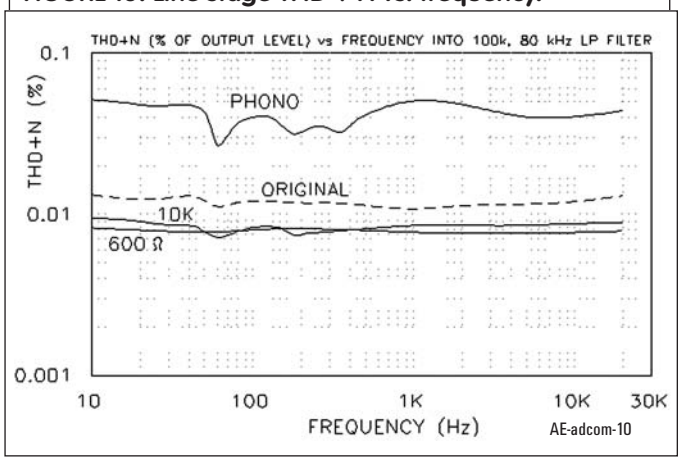

FIGURE 11: Line stage THD+N vs. output voltage.

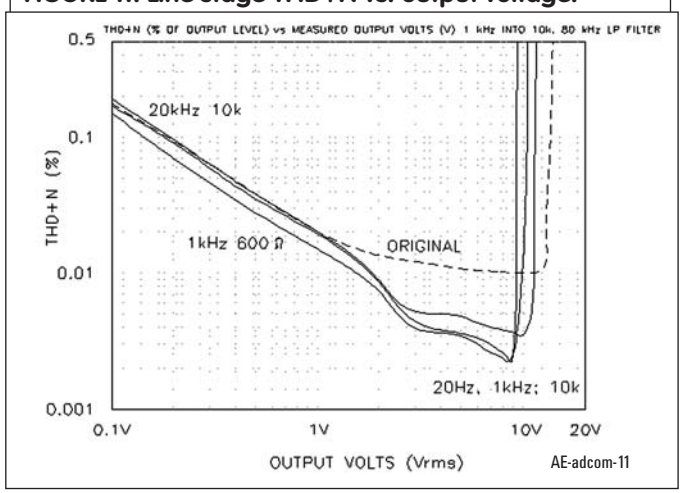

ward a more muted high frequency response that became strident when I used the tone controls to compensate. With both CD and LP sources, the modified unit is much easier to listen to than the original. The midrange especially is more detailed and open, with better imaging and a wider and deeper soundstage. It has also made listening to classical music on my FM tuner more enjoyable.

FIGURE 12: Line stage 1kHz residual.

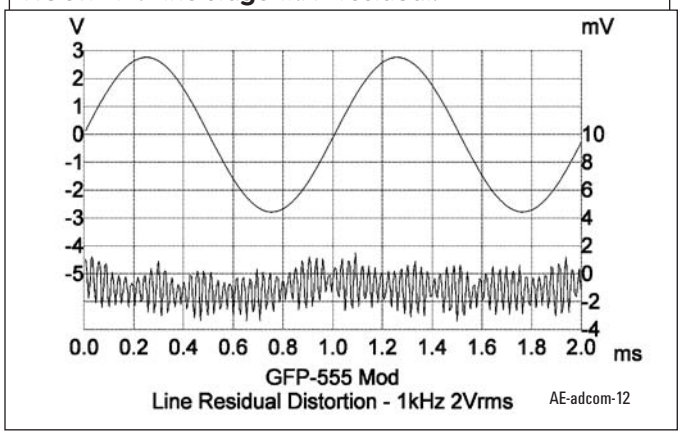

MEASUREMENTS

Once my listening sessions were over, I swapped the AD845 for the OPA627 and ran the whole preamp on a ±24V DC lab supply that was located across the room. Even with the power supply connected to the raw DC rails via three alligator clips and long lead wires, I could measure a slightly lower noise floor with the OPA627, so you might want to consider it for a two-box design like Gary's.

Phono stage hum and noise (with the AD845 op amps back in the sockets and the inputs terminated with 1.33k) measured –71dB. Switching in the A-weighting filter reduced this to –82dB. Crosstalk measured –76dB L-R and -78dB R-L, phono in to tape out.

Figure 6 shows the RIAA equalization error that I measured using an inverse-RIAA network, with the equivalent of 10mV input at 1kHz and a 10k load at the Tape 1 output. The original response has a +0.4dB peak at 25Hz, while the modified unit follows the IEC 9/76 modification and has 0.2dB lower gain at 1kHz.

Figure 7 shows the residual distortion for the phono preamp in response to a 50Hz sine wave. The fundamental sine wave is at the top, while the residual distortion after the test set notch filter is at the bottom (not to scale). The residual is predominantly third harmonic with noise riding on it.

You can get a sense of the phono stage hum pickup from the power transformer in **Fig. 8**, the spectrum of response to the same 50Hz sine wave. The THD+N measures 0.043%, while the THD calculated from the 50Hz harmonics alone is just 0.0039%. These first five harmonics are all below –93dB.

However, the 60Hz AC line induces a –78dB component into the spectrum followed by a decreasing series of odd harmonics of 60Hz. The two-box approach would doubtlessly eliminate this problem. I was pleased to see that the even harmonics, which occur due to rectification of the AC line, were noticeably absent with the new transformer, rectifier/snubbers, and regulators.

The line stage output impedance was 97Ω over the entire audio band. The Tape 1 and Tape 2 line output impedances were 1k due to the series discrete resistors of that value. Hum and noise measured –80dB, improving to -88dB after engaging the A-weighting fil-

TABLE 1: PARTS LIST.

Symbol	New Value	Description	Vendor	Part No.	Qty	Circuit	Old value
C001	47n	ceramic disk			1	chassis gnd	same
C101, C102	10p	NPO			2	phono stage	55p
C103, C104	55p	polystyrene			2	phono stage	120p
C105, C106	120p	polystyrene			2	phono stage	180p
C107, C108	delete				0	phono stage	470u 50V
C109, C110	jumper				0	phono stage	4u7 63V
C111, C112	10n	polystyrene	Mouser	23PW310	10	phono stage	1000p
C113, C114	270p	polystyrene			2	phono stage	30p
C115, C116	27n	MPP			2	phono stage	3600p
C115a, C116a	3n	polystyrene			2	phono stage	R113, R114
C117, C118	63k4	metal film			2	phono stage	R117, R118
C117a, C118a	1n5	polystyrene			2	phono stage	new
C119, C120	1u 50V	film, Mallory 168	Newark	89F1692	2	phono stage	100n 100V MPP
C121, C122	1000u 50V	cap, alum, Nichicon KZ	Percy		2	phono stage	1000u 25V
C201, C202	delete				0	line stage	47p ps
C203, C204	680n	MPP			2	lo filter	same
C205, C206	15n	MPP			2	hi filter	same
C207, C208	delete	C207 --> jumper			2	line out normal	4u7 63V MPP
C209-C212	56n	MPP			4	tone control	same
C213-C216	8n2	MPP			4	tone control	same
C217-C218	47p	polystyrene			2	tone control	same
C219, C220	220n	mylar film			2	contour	same
C221, C222	1u 50V	film, Mallory 168	Newark	89F1692	2	line stage	100n 100V MPP
C221a, C222a	1000u 50V	cap, alum, Nichicon KZ	Percy		2	line stage	new
C251, C252	1n5	polystyrene (across BAL)			2	line stage	new
C301, C302	delete				2	headphone	4u7 10V ta
C303, C304	delete				2	headphone	220p ps
C305, C306	delete				2	headphone	220n my
C901-C904	470n 100V	Stacked film-V	DK	P4733-ND	10	dc sply snubber	10n 250V ceramic
C905, C906	4700u 63V	cap, alum, Nichicon KG	Percy		2	dc supply	4700u 50V al
C907, C908	1u 50V	film, Mallory 168	Newark	89F1692	2	dc supply	100n 100V MPP
C909, C910	120u 50V	aluminum HFQ			2	dc supply	470u 50V
C911, C912	1k21 1%	becomes R907a, R910a			2	dc supply	
C913	22u 50V	aluminum			1	dc supply	
C914	delete	aluminum			0	dc supply	220u 50V al
C915, C916	100n 50V	aluminum			2	dc supply	
C917, C918	560u 50V	cap, alum, Pana HFQ			2	dc supply	470u 50V
C917A, C918A	1000u 50V	cap, alum, Nichicon KZ	Percy		2	dc supply	new, line stage
C919, C920	1000u 16V	aluminum			2	relay delay	same
C921	100u 16V	aluminum			1	relay delay	same
D901a-D901d	HFA08TB60	HexFred	DK	HFA08TB60-ND	4	dc supply	PB135M FW bridge
D902	1N4003	diode			1	dc supply	same
D903	delete				0	dc supply	12V zener UZ12B
D904		Red LED T-1 3/4			1	dc supply	same
D905	9V zener	UZ9JB			1	relay delay	same
D906	1N4148	500mA 75V			1	relay delay	same
D907-D910	1N4002	diode 1A 100V			4	dc supply	new
D916	1N3595	diode 125mA 150V			1	relay delay	new
F001	0.5A 3AG	Fuse			1	ac line	same

FIGURE 13: Line stage spectrum of 50Hz sine wave.

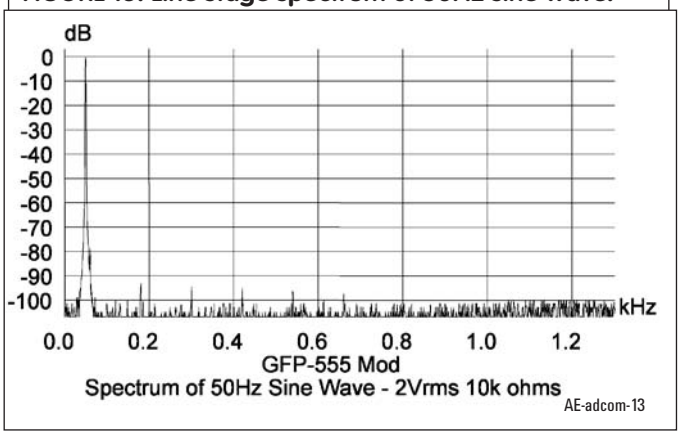

FIGURE 14: Line stage 40Hz square wave response.

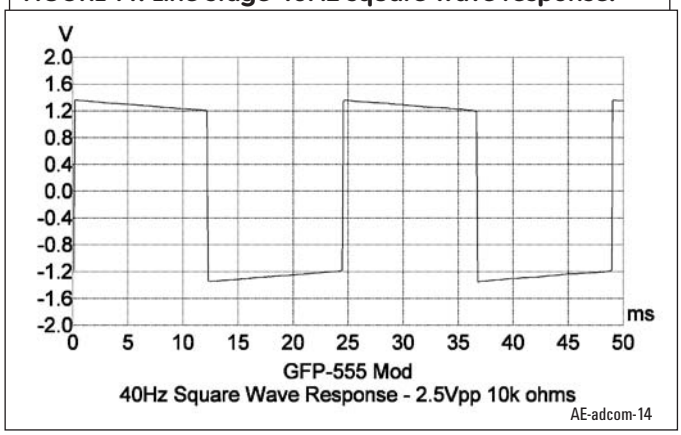

ter. Output DC offset measured about +1.5mV in both channels. Crosstalk at 10kHz was -61dB R-L and -65dB L-R, line in to tape out. Unity gain occurred with a volume control setting of 2 o'clock, and the worst-case volume control tracking error was 0.4dB.

Figure 9 shows the line stage frequency response at 2V output into an open circuit (top) and also for loads of 10k and 600Ω. The response of the original preamp with the 5E op amps is also shown in a dashed line with a 10k load. There is a 0.5dB improvement in output and a flatter HF response with the lower impedance composite line stage. My Tone Output (not shown) is almost identical in response to the original.

The line stage THD+N versus frequency is shown in **Fig. 10** for both line and phono inputs. The dips in the otherwise flat response at 60, 120, and 180Hz are where the distortion test set notches out the AC line hum pickup within the preamp circuitry. The THD+N versus output voltage is shown in **Fig. 11**, where once again the measurements for the original unit are shown as a dashed line in both figures. The greater final output voltage for the original unit is a result of the higher power supply rails (±21.5V versus ±16.2V).

Figure 12 shows the line stage residual distortion at 1kHz. The residual after the notch filter (not to scale) is mainly low-level noise. The spectrum of a 50Hz sine wave in **Fig. 13** shows a similarly low level of hum and noise, with the 180Hz component at –93dB. The THD+N measures 0.0086% with a calculated THD based on the 50Hz harmonics of only 0.0017%, all the harmonics being below –98dB.

The response to a 40Hz square wave in **Fig. 14** shows very little tilt in this direct-coupled design. The response to the 1kHz square wave in **Fig. 15** is just about perfect, as is the 10kHz square wave (not shown).

Finally, the modified preamp response to an equal-value 19kHz + 20kHz CCIF intermodulation test signal (**Fig. 16**) shows the 1kHz, 18kHz, and 19kHz IMD products to be less than –100dB (0.001%). *aX*

Symbol	New Value	Description	Vendor	Part No.	Qty	Circuit	Old value
F901, F902	2A SB 3AG	Fuse			2	dc supply	0.5A FB
IC101, IC102	AD845KN	op amp (or OPA627)			2	phono stage	Adcom 5E
IC201a, IC202a	AD744KN	op amp	Newark		2	line stage	Adcom 5E
IC201b, IC202b	AD811AN	op amp, CFB	Newark		2	line stage	Adcom 5E
IC203	OPA2604	op amp, dual	Digi-Ke	OPA2604AP-ND	1	tone control	NJM2041D
IC301	delete				1	headphone	NJM4556D
IC901	LT1085CT	Reg, +Adj, 3A, TO220	Percy	LT1085CT	1	dc supply	new
IC902	LT1033CT	Reg, -Adj, 3A, TO220	Percy	LT1033CT	1	dc supply	new
J, left phono		IC101 pin 2 --> R115 out			1	phono stage	
J, rt phono		IC102 pin 2 --> R116 out			1	phono stage	
J20, 21, 26-30, 38, 39, 46		MWT-20 jumper			11	dc supply	MWT-22, line stage
J31, 35, 37, 40, 41, 43, 50, 51	delete				0	line stage/tone	MWT-22
PC001		Headroom module board			1	headphone	
Q901	delete				1	dc supply	2SB633 PNP
Q902	delete				1	dc supply	2SD613 NPN
Q903	jumper b-c				1	dc supply	2SA608K PNP
Q904	jumper b-c-e				1	dc supply	2SC536 NPN
Q905		2SA984K PNP			1	relay delay	same
Q906		2SC2274 NPN			1	relay delay	same
Q907-Q909		2SC945 NPN			3	relay delay	same
R001	10 1/2W	metal film			1	chassis gnd	same
R101, R102	100 1%	metal film			2	phono stage	same
R103, R104	47k5 1%	metal film			2	phono stage	same
R105, R106	100 1%	metal film			2	phono stage	same
R107, R108	jumper				0	phono stage	825 1%
R109, R110	jumper				0	phono stage	2k00 1%
R111, R112	7k87 1%	metal film			2	phono stage	73k2 1%
R113, R114	2n7	polystyrene			2	phono stage	887k 1%
R115, R116	97k6 1%	metal film			2	phono stage	332k 1%
R117, R118	470n 50V	MPP			2	phono stage	825 1%
R117a, R118a	499 1%	metal film (replace J6, J17)			2	phono stage	new
R119, R120	33 1/2W 1%	metal film			2	phono stage	same
R201-R204	1k00 1%	metal film			4	tape in/out	same
R205, R206	1k00 1%	metal film			2	line stage	475 1%
R205, R206	475 1%	metal film			2	sig proc in	same
R207, R208	3k09 1%	metal film			2	contour	same
R209, R210	10M 1%	metal film, Roederstein MK3	Percy	71-RN55D-10M	2	line stage	100k 1%
R211, R212	1k00 1%	metal film			2	line stage	2k21
R211a, R212a	665 1%	metal film (on AD811 platform)			2	line stage	new
R213, R214	4k02 1%	metal film			2	line stage	27k4
R213a, R214a	1k00 1%	metal film (on AD811 platform)			2	line stage	new
R215, R216	20k0 1%	metal film			2	lo filter	same
R217, R218	475 1%	metal film			2	lo filter	same
R219, R220	20k0 1%	metal film			2	line out normal	20k0 1%
R221, R222	22k1 1%	metal film			2	tone control	same
R223, R224	6k81 1%	metal film			2	tone control	same
R225, R226	1k00 1%	metal film			2	tone control	same
R227, R228	6k81 1%	metal film			2	tone control	same
R229, R230	1k00 1%	metal film			2	tone control	same

FIGURE 15: Line stage 1kHz square wave response.

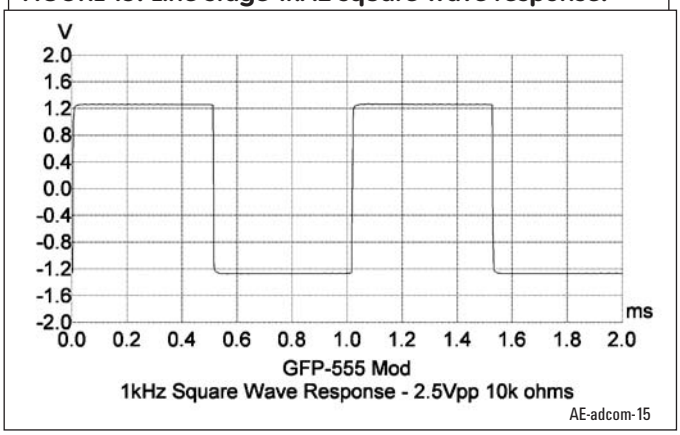

FIGURE 16: Line stage CCIF IMD.

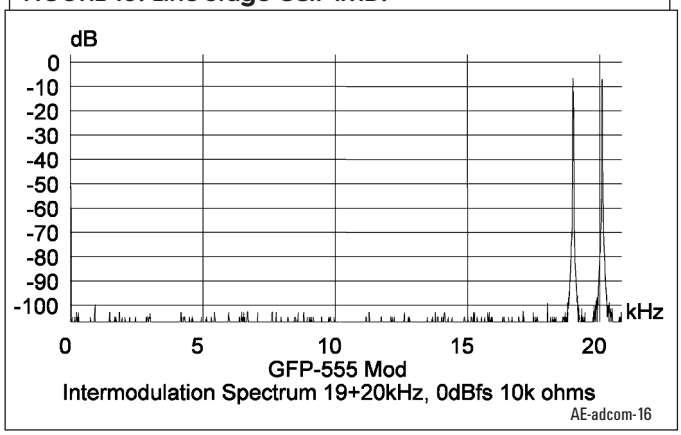

References

1. "Adcom's GFP-565 Preamplifier, Part 1," Gary Galo, Nov.'03 *audioXpress*, p. 6.
2. "Adcom's GFP-565 Preamplifier, Part 2," Gary Galo, Dec.'03 *audioXpress*, p. 42.
3. "Adcom's GFP-565 Preamp Mods, Part 3," Gary Galo, Jan.'04 *audioXpress*, p. 40.
4. Letter, "Preamp Series," Mar. '04 *audioXpress*, p. 66.
5. "GFP-565 Preamp Follow-Up Mod," Gary Galo, Dec.'04 *audioXpress*, p. 26.
6. "RIAA Preamplifier With HeadRoom™ Module," Hansen, C., 6/97 *Audio Electronics*, pp. 8-21.
7. Book Review, *Op Amp Applications*, Hansen, C., Apr.'04 *audioXpress*, pp. 58-61.
8. "A High Performance Audio Composite Line Driver Stage," Walt Jung, Analog Devices AMPLIFIER APPLICATIONS GUIDE 1992 pp. V-18 to V-22.
9. "POOGE-5: Rite of Passage for the DAC960," Parts 1 and 2, Gary Galo and Walt Jung, *TAA* 2/92, p. 10; *TAA* 3/92 p. 34; "Errata," *TAA* 1/93 p. 40; Letter *TAA* 4/93 p. 45; "POOGE 5.5: More DAC960 Modifications," *TAA* 1/94 p. 22; Question, *TAA* 1/94 p. 47; Correction, *TAA* 2/94 p. 38.
10. "Current Boosted Line Driver," Analog Devices SYSTEMS APPLICATION GUIDE 1993 pp. 8-79 to 8-82.
11. "Current Boosted Buffered Line Drivers," *Op Amp Applications Handbook*, pp. 476–479. The entire seminar edition is online for a free download at www.analog.com/library/analogDialogue/archives/39-05/op_amp_applications_handbook.html. You can download an errata document for the Newnes editions of OP AMP APPLICATIONS HANDBOOK from Walt Jung's website at www.waltjung.org. Click on the ADI Books & Articles button.

SUPPLIERS

Digi-Key Corp.
701 Brooks Ave. South
Thief River Falls, MN 56701-0677
1-800-344-4539 *www.digikey.com*

MCM Electronics
650 Congress Park Dr.
Centerville, OH 45459
1-800-543-4330 *www.mcmelectronics.com*

Michael Percy Audio Products
PO Box 526, 170 Highland
Inverness, CA 94937
1-415-669-7181

Mouser Electronics
958 N. Main
Mansfield, TX 76063-4827
1-800-346-6873 *www.mouser.com*

Newark Electronics
4801 N. Ravenswood Ave
Chicago, IL 60640-4496
1-800-463-9275 *www.newark.com*

Symbol	New Value	Description	Vendor	Part No.	Qty	Circuit	Old value
R231, R232	6k81 1%	metal film			2	tone control	same
R233, R234	1k00 1%	metal film			2	tone control	same
R239/a, R240/a	100 1%	metal film			4	line stage	new
R301, R302	delete				2	headphone	47k5 1%
R303, R304	delete				2	headphone	100k 1%
R305, R306	delete				2	headphone	1k00 1%
R307, R308	delete				2	headphone	10k0 1%
R309, R310	delete				2	headphone	150 1%
R901, R902	jumper				0	dc supply	22 1/2W
R903, R904	delete				0	dc supply	3k32 1%
R905, R906	jumper				0	dc supply	332 1%
R907	100 1%	metal film (with 1N4002 parallel)			1	dc supply	2k21 1%
R907A, R910A	1k21 1%	metal film			2	dc supply	new
R908	100 1%	metal film (with 1N4002 parallel)			1	dc supply	8k25 1%
R909	delete				0	dc supply	12k1 1%
R910, R912	delete				0	dc supply	10k0 1%
R911	delete				0	dc supply	681 1%
R914	10k0 1%	metal film			1	relay delay	same
R915, R916	4k75 1%	metal film			2	relay delay	same
R917, R918	10k7 1%	metal film			2	relay delay	same
R919	475 1%	metal film			1	relay delay	same
R920	100k 5%	metal film			1	relay delay	56k2 1%
R921	jumper	jumper			1	relay delay	
R922	1M 5%	carbon film			1	relay delay	new
R923-R926	47.5 0.6W 1%	metal film	DK	BC47.5ZCT-ND	5	dc sply snubber	new
RY901	DPDT 1A	Relay 24V RZ24W, 1k ohm			1	relay delay	same
T001	36VCT 2A	SR5-5002-1			1	dc supply	TT-210GF
tw-pr/wh-blk		tone out left			1	tone control	
tw-pr/wh-blk		main out left, IC201 pin 6 at R			1	line stage	
tw-pr/wh-blk		vol control at R			1	headphone in	
tw-pr/wh-red		tone out rt			1	tone control	
tw-pr/wh-red		main out rt, IC202 pin 6 at R			1	line stage	
tw-pr/wh-red		vol control at R			1	headphone in	
TX438		headphone jack, 1/4" stereo			1	headphone	same
Txleft		Gold phono jacks, black		MCM 20-2110	9	input/output	
Txright		Gold phono jacks, red		MCM 50-2105	9	input/output	
VRbalance	50k dual	balance control, Alps			1	line stage	
VRbass	20k B dual				1	tone control	same
VRtreble	20k B dual				1	tone control	same
VRvolume	50k dual	volume control, Alps			1	line stage	same
		heat sink, DIP, Avid	DK	HS179-ND	10	line stage	
		heat sinks, TO220	DK	HS303-ND	4	dc supply	
		dip socket			7	all	
		dip platform			2	line stage	

Back

VENDORS

High Performance kits: Phono, DAC, Buffers, Line amps, Headphone amps, Power amps, Home Theater amps, Crossovers, Power supplies, Regulators
www.borbelyaudio.com
Selected BORBELY AUDIO kits in Japan: http://homepage3.nifty.com/sk-audio/

www.UnityAudio.ca Canadian hand crafted cables and loudspeakers, great with tube gear!

Several new products including models 444 headphone amp and 465 6-channel volume control.
www tdl-tech.com (505-382-3173).

SPEAKERBITS

Foam, cloth and rubber surrounds, spiders, cones, dustcaps, horn diaphragms, world's best voice coils and brad wire.

Genuine foam surrounds for Dynaudio, Tannoy, Scan-Speak and more.

Trade welcome-email for your user ID.

www.speakerbits.com

SUBSCRIBE AND SAVE!

SAVE NEARLY $50 OFF THE COVER PRICE!

Call 888-924-9465 or subscribe on-line at www.audioXpress.com.

Visit Us Online at

audioXPRESS .com

It Just Sounds Better.

Welcome to audioXpress

Magazines:
- audioXpress
- Voice Coil

Directories:
- Loudspeaker Industry Sourcebook
- World Tube Directory

Resources:

www.audioXpress.com

ALL ELECTRONICS CORPORATION

Electronic and Electro-mechanical Devices, Parts and Supplies. Many unique items.

www.allelectronics.com

Free 96 page catalog
1-800-826-5432

BILLINGTON EXPORT LIMITED

All types of audio tubes. 300B 6DJ8 ECC81 ECC83 KT88 Mullard GEC Sylvania. Discount for large quantity. Billington UK. Tel (0)1403 784961. Fax (0)1403 783519. Email/website www.bel-tubes.co.uk

www.AUDIOCLASSICS.com

AUDIO • HOME THEATER • VIDEO • GUITARS

3501 Old Vestal Road, Vestal, NY

New • Preowned • Bought • Sold • Traded • Repaired

607-766-3501 OR 800-321-2834 HOURS: M-F 8-5:30, SAT. 11-4

Ad Index

ADVERTISER	PAGE
ACO Pacific Inc	14
Antique Radio Classified	33
Audience	61
Audio Amateur Corp	
audioXpress Subscription	52
Classifieds	52
Old Colony Sound Lab -	
Electric Guitar Amp Handbook	43
SOF-TLWrx	20
Sound Strobe	27
Speaker Building 201	53
Testing Loudspeakers	30
Audio Transformers	37
Audiomatica SRL	17
Audiyo	19
Avel Lindberg Inc	42
E-Speakers	7
EIFL	43
EzFir	29
Fountek Electronics Co.,Ltd.	8
Hammond Manufacturing	3
Harris Technologies	21
HSC Electronic Supply	15
KAB Electro-Acoustics	42
Linear Integrated Systems	59
Madisound Speakers	35
Marchand Electronics	18
Mouser Electronics	39
Mundorf EB GmbH	9
Parts Connexion	13
Parts Express Int'l., Inc.	CV4
Plitron Manufacturing	31
Rocky Mountain Audio Fest	32
SEAS Fabrikker AS	23
Sencore	25
Solen, Inc.	6
Test Equipment Depot	41
Triode Electronics	11
Tritium Electronics	33
Vidsonix Design Works	18
WBT-USA/Kimber Kable	CV2
CLASSIFIEDS	
All Electronics	52
Audio Classics	52
Billington Export Ltd.	52
Borbely Audio.	52
OZ Enterprises	52
Speakerbits	52
TDL Technology, Inc.	52

Yard Sale

FREE ADS FOR SUBSCRIBERS

Yardsale Guidelines:

1. Submissions accepted from subscribers to *audioXpress* magazine only. You must include your subscription account number with each submission.

2. Submit your ad to Yard Sale, PO Box 876, Peterborough, NH 03458. Or fax to (603) 924-9467, or e-mail to editorial@audioXpress.com.

3. Please be sure your submission is legible. We are not responsible for changing obvious mistakes or misspellings or other errors contained in ads.

4. We will not handle submissions over the phone. Please do not call to verify acceptance or inquire about the status of your submission.

5. Each submission will be used until the next issue of the magazine subscribed to is published.

6. Maximum 50 words. No accompanying diagrams or illustrations or logos will be used.

"Yard Sale" is published in each issue of *aX*.

NOW YOU CAN BECOME A SPEAKER BUILDER

with Speaker Building 201 by Ray Alden

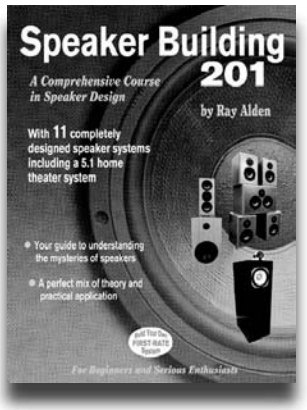

Whether you're a beginner eager to get into speaker building, an intermediate builder who wants to improve his skills, or a speaker building fanatic who's looking for projects to build, author Ray Alden has written this book for you!

You don't need an elaborate workshop, expensive analytical equipment, or sophisticated software. Alden walks you through the steps to design and construct a first-rate system—one that surpasses higher-cost commercial products.

Features 11 proven projects to build, many of which have been tested by loudspeaker expert, Joseph D'Appolito.

2004, 8½ × 11, softbound, ISBN 1-882580-45-1. Shipping weight: 2 lbs. **BKAA66 — $34.95**

■ **To order call 1-888-924-9465 or order on-line at www.audioXpress.com** ■

"This is the book I've been waiting for all my life.... In the future, when I'm asked to recommend a book to someone who wants to 'learn about speaker design,' I'll be recommending Ray Alden's ***Speaker Building 201****. It's an outstanding acheivement." — Jutta Dziwnik,* ***Australian Hi-Fi Magazine****, June/July 2005*

Old Colony Sound Laboratory
PO Box 876, Peterborough, NH 03458-0876 USA
Toll-free: 888-924-9465 Phone: 603-924-9464 Fax: 603-924-9467
E-mail: custserv@audioXpress.com • www.audioXpress.com

Renovating the Scott 222C, Part 5:

Output Tube Alternatives to the 7189 and Tube Matching Tests

By Charles Hansen

The 7189 is no longer manufactured. It was developed in 1958 for hi-fi use, and produced by Amperex, Mullard, GE, RCA, Sylvania, Telefunken, Tung-Sol, and Westinghouse.[9] The four output tubes that came with my 222C have the Telefunken logo.

You often see eBay tube listings for EL84/6BQ5 tubes as "equivalent" to the 7189. A pair of EL84s in Class AB1 push-pull are only rated for 11W, and require a higher bias current of 31mA per tube. More important, the plate and screen are limited to 250V. While you can probably install the 7189 in an EL84 socket without harm or benefit, installing EL84s in a Scott 222C or 222D is a death sentence for these tubes. You would need to change the power transformer in a 222C or 222D (as well as the 299A or 299B) to use the ubiquitous EL84, which is still readily available thanks to the guitar amplifier manufacturers.

Another tube often portrayed as a 7189 equivalent is the Russian-made "6п14п" (the Cyrillic characters translate to the English *6p14p*). I purchased four "matched" 6п14п tubes on eBay and ran the four 7189 and 6п14п tubes on the Audiomatica Sofia tube curve tracer. Typical plate curves are shown in **Figs. 72** and **73**, respectively. I ran the Sofia matching program, and found two of each tube type to be fairly well matched. I marked them for reference.

For those familiar with the Sofia matching test, the lower the number the better the match, with a match of less than 100 being very close. My matching numbers in order are

7189 matched = 110
6п14п matched = 186
6п14п unmatched = 1276
7189 unmatched = 1439

I don't know how much matching Scott did for their tubes, but the four so-called "matched 6п14п" tubes I purchased had a number "78" that was written in black marker on each tube. These tubes had two different 4-digit numbers etched below the part number, two were 0683 and two were 8910. The matched set had one of each of these codes. Perhaps they were put on a tube tester and sorted by meter readings, but that hardly qualifies them as dynamically matched in the push-pull audio sense. There are plenty of tubes being offered as "matched sets" on eBay. My experience is let the buyer beware!

The 6п14п data sheet has both plate and grid curves, but I have never seen curves for the 7189 or 7189A. Feel free to use the curve in **Fig. 72** for your own use, with the caveat that these 7189 tubes may be 40 years old and I do not know how many hours they have on them. (You can see all four plate curves for each tube type on www.audioXpress.com.)

I measured the Sofia plate curve incremental Gm, μ, and Rp at 22mA plate current and 410V plate voltage (**Table 9**). The 7189 is a higher μ tube, while the 6п14п has a lower Rp. The 7189 is a lower wattage tube, requires a lower grid resistance for self-bias, and has half the rated distortion. The 6п14п is a Soviet military tube with a rated life of 3000 hours.

There are some differences between the 7189 and the 6п14п specifications and measurements. The 6п14п plate and screen

FIGURE 72: 7189 plate curve (typical).

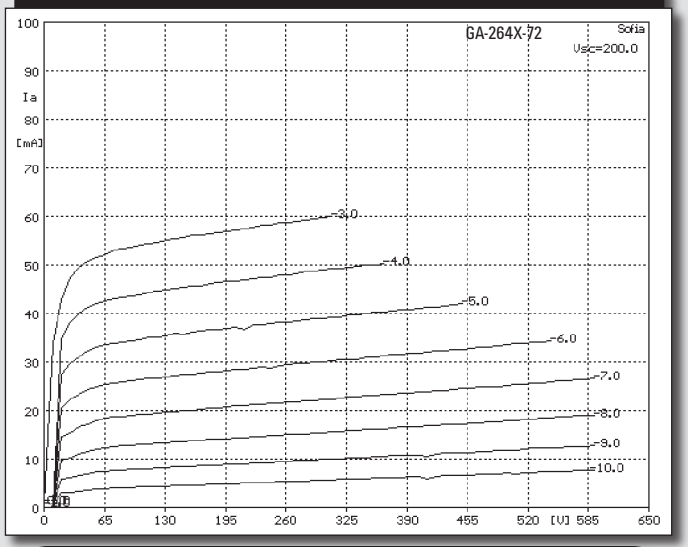

FIGURE 73: 6п14п plate curve (typical).

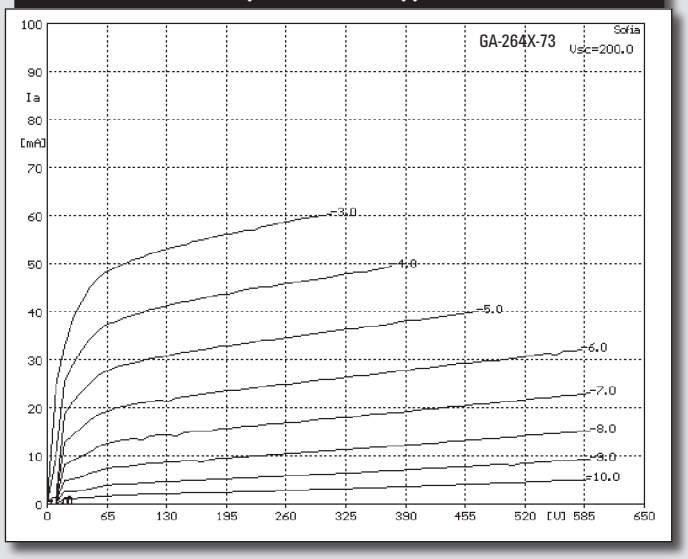

TABLE 9: COMPARISON OF 7189 AND 6п14п MEASUREMENTS AND SPECIFICATION DIFFERENCES.

Tube	7189	6п14п
Gm	7.88	7.63
μ	572	382
Rp	72k6	50k1
Pw	12W	14W
Rg	300k	1 Meg
THD	4%	8%

voltages are called "Limited Operating Values" and are identical to the 7189 ratings. I don't know whether this correlates to the RMA Design-Center Rating or the Design-Maximum Ratings Systems, or perhaps another system devised by the Russian military.

Two other variations of the 6П14П exist. The 6П14П–V has a maximum plate and screen voltage of 500V and a rated life of 1000 hours. The 6П14П–EV has the same higher maximum voltages and a rated life of 5000 hours. Both are designed and specified for high vibration and shock environments.

In order to judge their sonic performance, I installed the 6П14П tubes in place of the 7189s, with the two better matched tubes in channel B again. The initial bias readings were low—about 16mA. I adjusted the bias to 22mA per tube, and then repeated the one-half hour run-in followed by the listening tests. The bias current was still 22mA after one-half hour.

There was no difference between the two tubes in terms of the hum level or its predominance in channel A. The 6П14Пs had much better control over the bass, with good extension and fine acoustic bass accuracy. The treble was a bit more muted but still had nice midrange detail. Again, I preferred the overall sound with the NHT speakers connected to the 8Ω taps.

With the 6П14Пs still in place, I switched to the Extra input, which brought the steep input filter, the tone controls, and the 12AX7 preamp tubes into play. The bass extension was not as good as with the Direct input, but was improved over the 7189s even using the Direct input with those tubes. When I tried to restore the treble response with the tone controls, the upper midrange and low treble took on a bit of glare and stridency that I did not hear under any condition with the 7189 output tubes in the modified 222C.

Perhaps with more hours on them, the 6П14Пs may lose this treble edginess. I hope so for those who enjoy the classic older audio equipment. Thus far no manufacturer has stepped up to produce the 7189/7189A. Assuming the 6П14Пs remain available, they may eventually be the only recourse for re-tubing the vintage amplifiers that used the 7189 or 7189A.

After my listening session, I performed some limited measurements of the two tube types with just the Direct Input to the power amplifier.

The 6П14П produced a lower output impedance at the 4Ω and 8Ω taps compared with the 7189 (**Table 10**). The output power on the 6П14П plate curve is shown with R_A equal to 5k2,

TABLE 10: COMPARISON OF AMPLIFIER OUTPUT IMPEDANCE, 7189 VS. 6П14П.

Freq	7189 4Ω tap	7189 8Ω tap	6П14П 4Ω tap	6П14П 8Ω tap
20Hz	1.97Ω	3.07Ω	0.47Ω	0.70Ω
1kHz	0.85Ω	1.28Ω	0.50Ω	0.74Ω
20kHz	1.09Ω	1.94Ω	0.71Ω	1.22Ω

FIGURE 74: Comparison of THD vs. frequency, 7189 vs. 6П14П tubes.

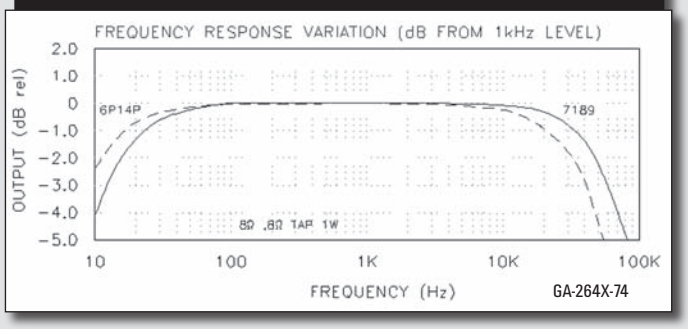

FIGURE 75: Comparison of THD vs. frequency, 7189 vs. 6П14П tubes.

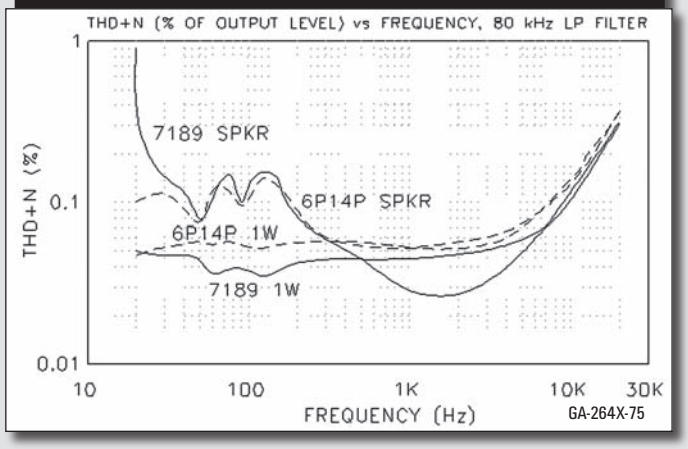

FIGURE 76: Comparison of THD vs. output power, 7189 vs. 6П14П tubes.

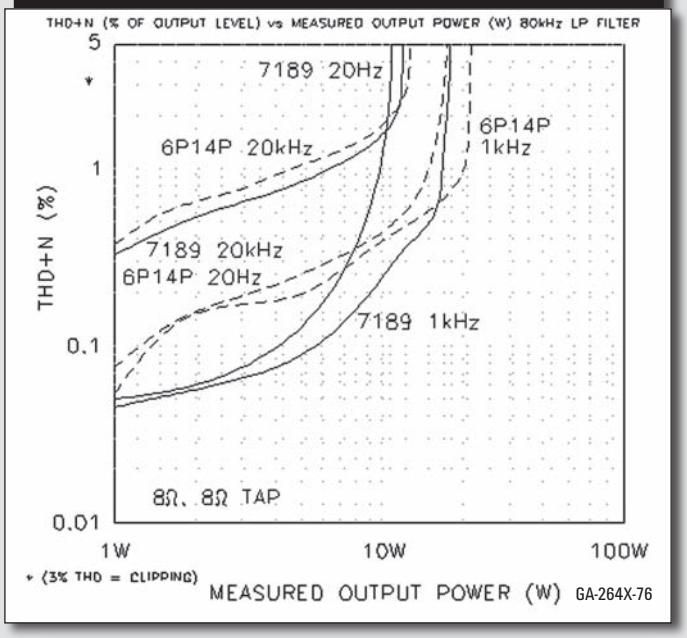

FIGURE 77: Comparison of maximum output power, 7189 vs. 6П14П tubes.

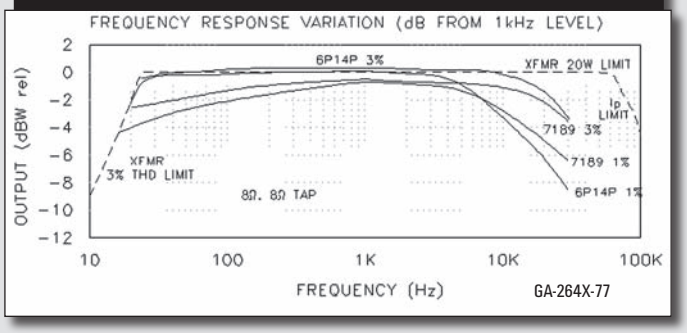

whereas the 7189 uses an 8k total push-pull impedance transformer. This probably makes sense given the lower Rp of the 6П14П.

The frequency response for the 7189 (solid line in **Fig. 74**) favors the higher end of the band, while the 6П14П (dashed line) is more effective at the low frequencies. Both curves are for 1W output with an 8Ω load on the 8Ω tap.

A comparison of the THD versus frequency at 1W into 8Ω and the loudspeaker load is shown in **Fig. 75**. A comparison of THD versus output power at 20Hz, 1kHz, and 20kHz into 8Ω for each tube type is shown in **Fig. 76**. Again, the 7189 is shown with a solid line and the 6П14П with a dashed line. I was able to squeeze more power from the 6П14П pair than the 7189 pair before reaching 3% THD. At 1kHz into 8Ω the difference is 20.6W versus 17.3W.

Figure 77 compares the frequency response of the power amplifier section of the modified 222C at 3% THD with the two tube types in a manner similar to **Fig. 5** (Part 1). The output load is 8Ω at the 8Ω tap. The 6П14П at 3% THD actually exceeds my transformer 20W limit line between 30Hz and 8kHz. I also added 1% THD curves to this graph to show how close they are in the important midrange frequencies. The THD versus output power curves in **Fig. 76** are nearly vertical lines above 1% THD.

TO MATCH OR NOT TO MATCH

I decided to try to find whether there was any measurable difference in terms of the frequency response, distortion, and the distortion products that are generated between pairs of matched and mismatched tubes. Recall that using the matching program data from the Sofia, the best matched pair of 7189s was better matched than the best pair of 6П14Пs. However, the worst matched pair of 6П14Пs was better matched than the worst matched pair of 7189s. With this caveat in mind, note my findings which follow. I ran each tube pair for 15 minutes before I made my measurements.

First, there is virtually no difference in amplifier frequency response (8Ω load on the 8Ω tap at an output power of 1W, not shown) between matched and unmatched pairs of tubes. This may be because designing around the output transformer limitations swamps out any tube performance limitations.

Figure 78 shows the THD versus frequency for matched and unmatched sets of the Telefunken 7189 and the Russian 6П14П. You can see here that the Audiomatica Sofia software matching program did a good job of predicting the order in which the selected sets of tubes produced their distortion.

The matched 7189s are the best, the mismatched 7189s the worst, with the 6П14Пs lying in between the two 7189

FIGURE 78: Comparison of THD vs. frequency, 7189 vs. 6П14П tubes, matched and mismatched.

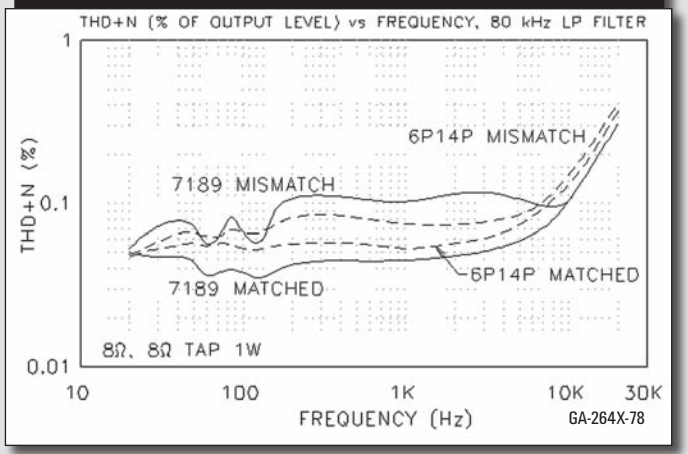

FIGURE 79: Comparison of THD vs. output power, 7189 vs. 6П14П tubes, matched and mismatched.

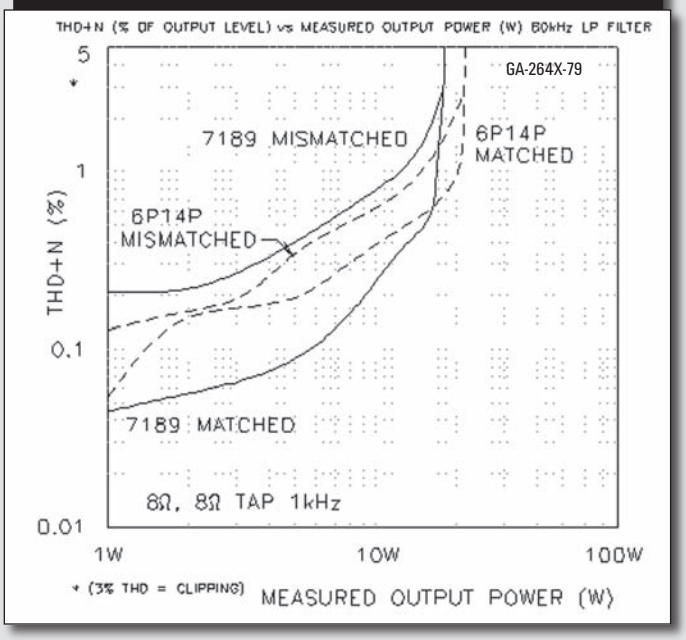

FIGURE 80: Spectrum of 50Hz sine 5W matched 7189 tubes.

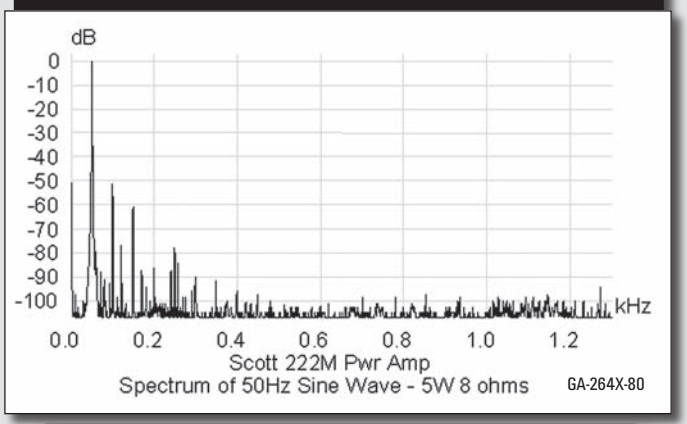

FIGURE 81: Spectrum of 50Hz sine 5W matched 6П14П tubes.

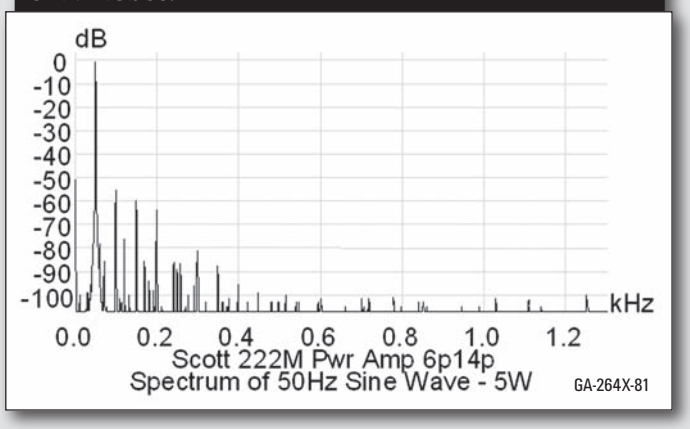

curves. The 7189s also show a greater dip in THD at the 60Hz and 120Hz points on the frequency axis. This may mean that the lower impedance 6П14П does a better job of rejecting power supply hum. Also, above 10kHz the two different sets of 7189 tubes converge to the same distortion level.

Figure 79 shows the effect of tube mismatch on THD versus output power. The software matching program again did a good job of predicting the order in which the selected sets of tubes produced their distortion. The maximum output power for a given tube type above 3% THD seems to be the same, whether the tubes are matched or not.

Figure 80 represents the 7189 matched pair and **Fig. 81** the 6П14П matched pair, where I recorded the spectrum of a 50Hz sine wave at 5W into 8Ω. The second harmonic is higher with the 7189, while the subsequent harmonics are higher with the 6П14П, and it has a lower noise floor. There isn't any noticeable difference in terms of AC line hum. Spectrums of the mismatched tubes (not shown) were similarly close in performance. The harmonics were higher overall but the distribution patterns were the same.

I also performed the multi-tone intermodulation test on the matched set of 7189 and 6П14П tubes. The results for the matched tubes are shown in **Figs. 82** and **83**, respectively. Several of the intermodulation products are higher with the 7189s.

Switching to the poorly matched tube pairs for the MIM test (**Figs. 84** and **85**) show a veritable picket fence of IMD products for the mismatched 7189 tubes, which also includes 60Hz AC line products surrounding each of the even- and odd-order products based on the 9kHz + 10.05kHz + 20kHz test frequencies. The mismatched 6П14Пs had far fewer IMD products and they had lower levels. I calculated the total IMD for the 7189s to be 0.103% while the 6П14Пs were almost half that at 0.057% total.

The MIM root-mean-square of the distortion products measured 0.058% on the matched 7189 set and 0.069% on the mismatched 7189 set. The MIM root-mean-square of the distortion products measured 0.044% on the matched 6П14П set and 0.057% on the mismatched 6П14П set.

The differences are characterized by a higher level of even-order products and a broad distribution of multiples of 950-1050Hz with the mismatched set. Even with the bias on both tubes set to 22mA, the differences in gain result in a failure to cancel the even-order harmonics that characterize the ideal push-pull amplifier. This could be corrected by adjusting the plate resistance in the phase inverter triode section of the 6U8, as mentioned earlier.

Some commercial designs provide a shunt variable resistor to make this adjustment whenever tubes are replaced. Other designs provide for a series variable resistor. In either case, the most common failure mode for potentiometers is an open wiper; connect the wiper to one end of the pot so a wiper failure does not leave the plate circuit open. *aX*

References

9. *Tube Lore*; L. Sibley; Sept. 1996, with supplements 1997, 2002; Chernay Printing.

FIGURE 82: MIM spectrum for matched 7189 tubes.

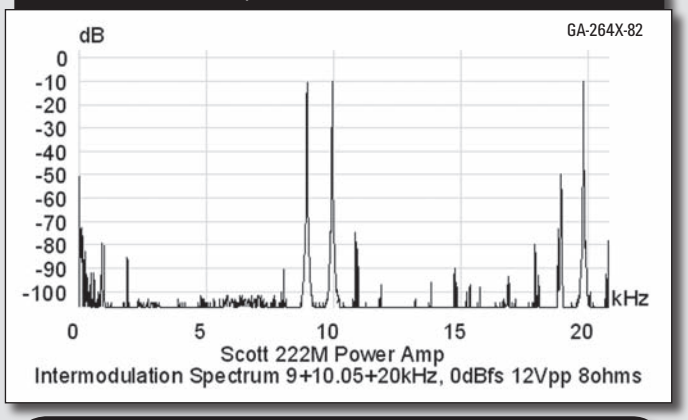

FIGURE 83: MIM spectrum for matched 6П14П tubes.

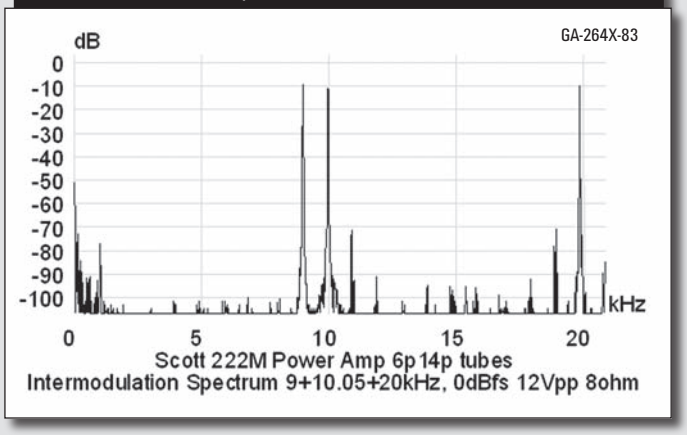

FIGURE 84: MIM spectrum for mismatched 7189 tubes.

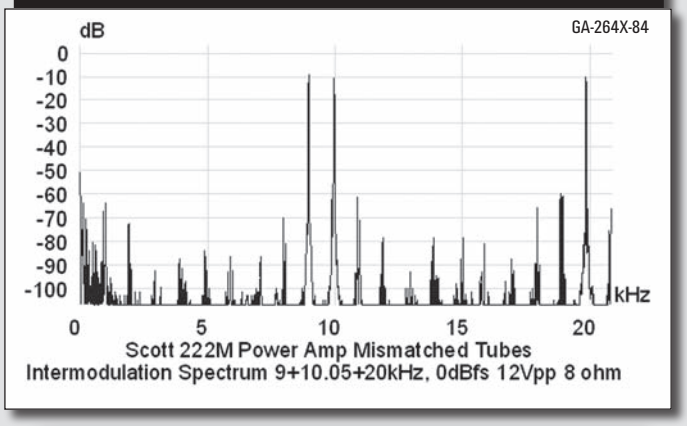

FIGURE 85: MIM spectrum for mismatched 6П14П tubes.

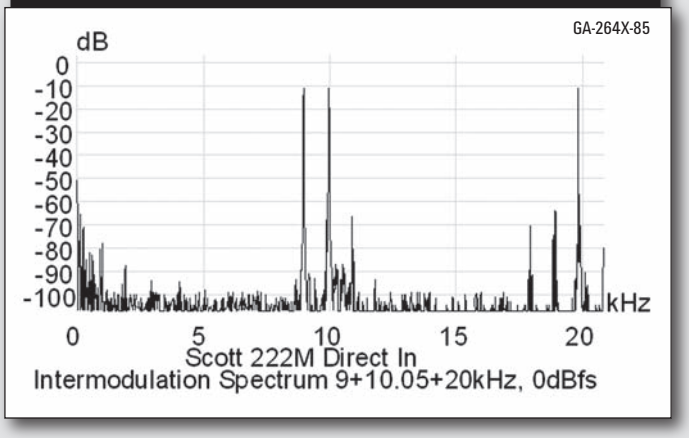

CATHODE FOLLOWERS

I read with interest Christopher Paul's article "Rehabilitating Cathode Followers" (May '06, p. 36), and I fear that it neglects the whole point of using the cathode follower.

The cathode follower gives you large amounts of current gain when you need them. I don't think it's fair to compare a common-cathode voltage amplifier with a cathode follower—both going into 100k loads—because that's not how the cathode follower is used. Try them both with a 50Ω load and then see which one does a better job.

The cathode follower should clearly be *better* at dealing with capacitive loads than a voltage amplifier, specifically because the output impedance is lower and this will swamp a larger load capacitance.

A fairer comparison would be between the cathode follower and a voltage amplifier combined with an output transformer to get the same output impedance. In this case, the follower *should* perform more poorly into a capacitive load. Though, of course, you now have all the other difficulties that come along with having a transformer in the signal path.

Scott Dorsey
Kludge Audio
Williamsburg, Va.

Christopher Paul responds:

Mr. Dorsey seems to have been on the side of the angels from the start when it comes to acknowledging the ability of cathode followers (CFs) to drive capacitive loads. I wonder whether he is aware of how many people hold the view that a CF is simply unsuitable for such a task. I wrote the article to address this commonly held view, not to compare the abilities of CFs and common-cathode amplifiers (CCAs) to drive 100kΩ resistive loads. I don't believe I made that comparison.

Mr. Dorsey intrigues with his suggestion of comparing the abilities of CFs and CCAs to drive a 50Ω load. Which does he say would do better, if either? And if we were to use a transformer with a CCA, would it not be only fair to consider one with a CF? Which would better drive a capacitive load, and why?

If there are simple answers to these questions, perhaps Mr. Dorsey could provide them in a letter. If not, I for one would be interested in an article from him on those topics.

It's about time someone (Christopher Paul) "acquitted" the cathode follower ("Rehabilitating Cathode Followers," May '06). I used them (6SN7) driving KT88s in my 125W per channel amp ("Mad Katy," June '06, p. 6) with no problem (slew distortion or any other) driving the fairly high input capacitance of 4 × KT88 in parallel push-pull. The bandwidth of the CF is ≈500kHz, clean.

However, I'd like to point out one significant difference between the CF and the cathode-coupled amplifier (CCA), besides its near-unity voltage gain: Set up a CF and a CCA, as you've done in your article, and have each driving a purely resistive load, say 100k as you've shown on p. 36. Apply a 20kHz sine wave input to each, with each circuit driven to just below visible distortion. Now connect a 47μF cap across each 100k load. The CF will have the distortion shown in your Fig. 9.

But the CCA output won't be distorted; it will be attenuated but clean. That's because (1) the CCA has much more gain, so its input drive level is much lower than that of the CF (for the same just-below-clipping output condition); and (2) if the CCA tube didn't cut off with the 100k load, it still wouldn't with the load cap added.

The CCA has a modest amount of negative feedback (NFB) from the 2k cathode resistor's degeneration, but this NFB hardly "cares" what the plate output voltage is doing. Therefore, the equivalent output structure is a current source (gmV_g) in parallel with the plate resistance, and the 20k plate bias R.

This will drive any linear impedance, even a short circuit, without load-caused distortion.

The CF, however, is quite different—it has nearly 100% NFB from (and sensitive to) the cathode signal. This will make the tube respond to low (capacitive or other) load impedance by trying to "crank up the current drive" in an effort to keep the cathode output voltage from falling.

So the CCA advantage is that once the maximum input signal is determined for undistorted output with a moderate resistive load, then no amount of capacitance will produce slew (or other) distortion. The "normal" low operating distortion will change somewhat, but no severe distortion will be induced.

This is good for driving unspecified cable lengths. The relatively high output impedance and poor HF bandwidth can be improved by selecting a high-current tube and/or using an L-pad at the output.

I used a solid-state equivalent, that is, an open-collector transistor output, to drive long microphone cables ("A Purist Recording Mixer," *aX*, Feb. '06, Fig. 6, p. 55).

But as Mr. Paul's excellent article shows, the cathode follower is perfectly able to drive capacitive (or other difficult) loads, if properly designed.

Dennis Colin
dcolin@worldpath.net

Christopher Paul responds:

I'd like to thank Mr. Colin for his kind remarks about my article as well as for his thought-provoking (at least to me) comments on CF and CCA "Drivers on the Edge" (DOTE), which deliver the maximum currents they can to resistive loads. I agree with his analysis of how each will perform after adding capacitance. But I disagree with his conclusion that the advantage in such a case goes to the CCA.

Before I explain why, I'd like to point out that both of us are focusing on standalone drivers—that is, on those outside of feedback loops. As an aside, note that the frequency response deficit of a CCA DOTE would be converted into CF DOTE-like dis-

tortion by the extra gain of a feedback loop, which always attempts to extend frequency response.

Returning to stand-alone DOTEs, I think it's important to start any design with a statement of a required drive level for a specified range of loads, all concurrent with a flat frequency response. If loads vary too much and these requirements aren't met, then the design fails. The CF fails with occasional peak distortion, and the CCA with a signal level-independent frequency response deficit.

I don't think it's very useful to ask which design fails in the superior manner. The better question to ask is how to prevent failure in the first place. Mr. Colin's answer of a higher current triode is a necessary part of the solution for either DOTE.

It is instructive to return to the wide range of useful sub-DOTE level circuits and to apply to them some of the insights gained from Mr. Colin's letter. Remove the load capacitance from the DOTEs and reduce the drive levels so both circuits have a comfortable margin with their resistive loads. Now begin to add back load capacitance. The first problem you'll encounter is a CCA frequency response deficit.

Mr. Colin's letter shows how the CCA can overcome this, essentially by paralleling an additional resistance with the load and driving the CCA harder to achieve the original levels with the new load. That means, however, that the CCA must supply more current to its load in the mid and low bands, and therefore should be expected to produce more distortion there than the CF. Not a plus for the CCA.

Depending on signal levels, further capacitance increases would next cause one of two things. You could reach DOTE limits—a case already discussed—or you could reach a frequency response deficit for the CF. In the latter case, it is interesting to estimate the ratio of the capacitances which would cause frequency response problems for the drivers. This ratio is affected somewhat by the original load resistance, the one that the CF is still driving. That resistance is usually reasonably large, so make an approximation by ignoring it.

The CF output impedance is about $1/g_m$. That of the CCA is approximately $(1/g_m + R_k)G$, where G is the unloaded gain of the CCA and R_k is its cathode resistor. For small and medium signal triodes, R_k is typically around $2/g_m$, so the CCA output impedance would be about $3G/g_m$, or 3G times that of the CF. (You can make the 3 disappear by capacitively bypassing R_k.) In many cases, that's a pretty big difference in the values of load capacitance that each design can tolerate without exhibiting frequency response deficits.

Unlike the CCA, the CF automatically compensates for a wide range of load capacitance, delivering only the currents needed by the load. Accordingly, it is an excellent driver for Mr. Colin's cables of uncertain capacitance. On the other hand, compensating the CCA for bandwidth requires of it higher dynamic currents to produce the original signal levels. This probably results in higher distortions than with the CF, a point I had missed in my article. And finally, consider that CCA DOTEs within performance-enhancing feedback loops take on CF-like distortion and frequency response characteristics.

Even more so than before, I think the advantage in driving complex loads goes to the CF.

AMP ABUSE

I, too, enjoyed reading Jim Carlyle's article in February 2006 *aX* about using clamped bias in a Class AB2 vacuum tube amplifier (p. 6). In a May 2006 Xpress Mail letter (p. 70), Bob Cordell asks the right (or *a* right) question: "Has Jim solved a problem that really only exists on the test bench unless the amplifier is being abused?" but neglects to define "abuse." To the musical purist, abuse might constitute anything producing audible distortion (whatever *that* may be), while to musical instrument and pro-sound designers "abuse" might rather be anything exceeding the power, voltage, or thermal envelopes of the device under test.

Similarly, an acoustic and jazz guitarist might have different ideas of "abuse" than a thrash-metal devotee. The latter might at some times actually desire crossover distortion, while at other times want "max headroom, loud and clean" (from the same amp, at the kick of a foot switch, of course!). But whatever the possibly questionable merits of crossover distortion in the realm of musical instrument tone generation, I think it safe to say that thus far the only artist to have

successfully incorporated the almost (but not quite) totally unrelated phenomenon of hangup (or blocking) distortion is Neil Young.

My understanding is that hangup distortion occurs when a capacitively coupled tube output stage *with global feedback around the driver* (such as Mr. Carlyle describes) is pushed so hard that the output tube saturates well before the driver. At this point the feedback disconnects and the driver tube output suddenly peaks as well, as any further increment in its own input signal is no longer attenuated by feedback. And the driver input *is* incremented. . . The power tube grid is then suddenly pulled *far*, far above its cathode with a concomitant rush of negative charge to the grid side of the coupling cap.

Now when the grid swings negative on the next half cycle you get not just crossover distortion, but full cutoff of the output tube (class B)—which is where the output tube stays (sometimes for as long as a second) until the grid bias resistor can eventually bleed off the excess charge. It is only with the greatest artistic skill that this effect may be coaxed into anything resembling music.

Blocking distortion has traditionally been controlled in MI amplifier design though judicious choice of dynamic range of the driver, coupled with small-value output tube bias resistors (in other words, sound hi-fi design). The former avoids or limits AB2 operation in the first place, while the second allows rapid bias re-equalization and avoids blocking. Fender's "master-volume" series silver face Pro and Twin Reverb amplifiers typify this conservative driver approach, as well as the general apathy it enjoys among most blues and rock guitarists.

Note that by making bleed resistor R variable, Mr. Carlyle's "Clamped Bias" becomes quite versatile, at least from the viewpoint of a guitar amp designer. My own suspicion is Mr. Carlyle's invention will indeed prove to be some sort of breakthrough, although not necessarily in traditional hi-fi design. Give it some time, kick it around. There are many inventive tinkerers Out There, and I look forward to experimenting with "Clamped Bias" in my own modifications and designs.

Thanks, Jim!

Reference

"The Ultimate Tone, Vols. 1 – 5" Kevin O'Connor, Power Press Publishing, London, Canada. (It's *all* in there somewhere...)

Edward Leaver
eleaver@earthlink.net

TUBE AMP DESIGN

Richard Sears' article ("6AS7 Current-Balanced Push-Pull Amplifier," May '06, p. 42) is interesting in the way that it systematically investigates the use of constant-current source in the design of tube amplifiers. It is clear that this author is fascinated by these devices and the numerous advantages they may offer.

Cathode-coupled phase splitters, or "Schmitt phase splitters," have equal output impedances but unbalanced output gains. The strategy to balance outputs is to strongly increase the common-cathode resistor. But doing so with a resistor requires some mounting tricks to bias tubes properly.

An elegant solution is to use a constant-current source, which exhibits low DC and high AC resistances. Constant-current sources are easy to set up using solid-state devices rather than tubes, and I am glad to notice that mixing tubes and solid-state devices in the design was not a philosophical blocking for Richard Sears.

Unfortunately, "golden-eared" audiophiles do not like the resulting sound. I have often heard this objection as soon as active devices are involved, meaning that their transient behavior is not as clean as supposed and generate probably unwanted harmonic and/or intermodulation distortion. Is author Sears aware of this judgment, and what is his opinion about it?

Concerning the output push-pull power section, it is clear that a strict balance of anode DC currents is essential to avoid OPT core saturation. This requirement exists for all push-pull topologies and all OPT types. Many solutions have been proposed to solve it correctly, the most popular being the grid bias adjustment to make anode current equal. Richard Sears' solution, which consists of implementing in constant-current source in the cathodes, is a clever one and has been suggested many times by designers. It has the advantage of making the output stage design simpler, the DC balance more robust, and the power supply modulation protection more efficient.

Nevertheless, I am still afraid of the "golden ears" judgment, and from that point of view, listening sessions with comments made by audiophiles would have been greatly appreciated. Why not consider the output push-pull power stage as a Schmitt phase splitter itself delivering output power? This seems possible and would lead to a great simplification for the driving section.

To conclude, Richard Sears' work deserves compliments and will encourage amateurs to follow and set up their own concepts and ideas, for the benefit of the whole audio community. I am waiting, with great interest, for the next iteration of this work with DC coupling between the driving and power sections, as promised by the author.

Pierre Touzelet
Vélizy, France

Richard Sears responds:

I would like to thank Mr. Touzelet for taking the time to write and for the complimentary tone of his letter.

The issue Pierre raises regarding audiophile acceptance of the use of solid-state devices in tube amplifiers is a tricky one. However, the use of solid-state constant-current sources is expanding and in some circles is fairly well accepted. Pierre states that the "golden ears" reaction to the use of hybrid audio circuits is negative: he asks whether I am aware of this issue and what my opinion is. I am aware of this issue and my view is that audiophile opinion should never stand in the way of experimentation.

Pierre further expressed a desire to know more about the results of listening sessions with audiophiles. In my article, I referred to some development done with the help of John Dahlman, who is an audiophile and professional bassist and also a member of the Washington, D.C., DIY Audio Group. I also exposed this design to another member of the D.C. group, who listened using his Phy KM30 drivers on Phy specification sand-filled open-baffles.

In comparison with a 45 SE amp (with 6SL7 drive and James iron), my push-pull design was clearly superior. It was much more open, exhibiting extraordinary micro-dynamic resolution, a very stable image, and authentic tonal balance. John has told me that this amp is *the* one he would choose

to use when recording for mastering reference playback. In comparison to my own 50, 300B, and 845 SE amplifiers, it just does a better job of getting out of the way of the music and that is surely the point.

I designed this amplifier as a "thought experiment" to see what could be done using inexpensive power toroids as output transformers. Pierre states that "this author is clearly fascinated by these devices" (solid-state constant-current sources). Actually, *my primary interest is in reducing the dependence of the sonic performance of an audio circuit on the power supply,* and minimizing the number of capacitors in the signal path, especially those in the B+ signal bypass loop, which are more expensive to source in the large value required in comparison to coupling capacitors *at the same level of quality.* Constant-current sources are a very powerful tool in this regard. This is exemplified by the fact that I was able to eliminate the B+ bypass capacitor across the balanced circuits.

Furthermore, the parts cost for this design was, at the time of building, around $250. This is extremely low and was a part of my objective. I can state that the performance of the resulting design is a delightful confirmation of the efficacy of my thought experiment. I do intend to build the next iteration, a fully DC-coupled version; however, I am not sure whether the DC stability of such a circuit will be acceptable.

Pierre posits the concept of making the output stage perform both phase-splitting and output transfer duties. This notion did occur to me. The reason I did not pursue is that if the output stage is driven by a single-ended signal, then the drive voltage to the grounded grid side will be via the cathode coupling. This means that the voltage across the MOSFETs will be heavily modulated, resulting in any nonlinearity of the MOSFETs under heavy modulation affecting the sound.

With balanced drive, the cathode signal will be due to any balance correction and thus vanishingly small. This is also true of the drive stage, which is driven by a single-ended signal; however, the voltage modulation of the drive stage current source is reduced by the gain of the drive stage. It would be interesting to see what sonic changes are audible if the drive stage were driven using a single-ended to balanced transformer. As I have stated, my design is the result of a thought experiment and I encourage further experimentation by readers.

HORN SUB

I've been thinking about the horn subwoofer in the "Table Tuba" (June '06, p. 20), and I think the basic folded horn idea has a lot of promise. The driver mounting baffle could perhaps be isolated easily enough from the rest of the assembly with something like wrestling mat gaskets to suppress the mechanical "thud" impulse when a bass drum is kicked, and so on. Then the signal to the stereo or four, five, or seven "surround sound" speakers could be delayed by some kind of electronic circuitry with a fine-tuning delay adjustment for a simultaneous arrival of this low-frequency sound wave. A delay of about one millisecond per foot of horn length should be close.

Mounting the speaker baffle reminds me of the technical challenge that submarine designers probably face (shock mounting parts and acoustic isolation for stealth to avoid detection and location).

Nelson Revis
Springfield, Mo.

PS. As you may have suspected, I'm a believer in the sealed enclosure type of speakers (more realistic percussion sound reproduction).

Bill Fitzmaurice responds:

Regarding the baffle, the way the Table Tuba is braced, the baffle is inert, as is the entire box, so isolation is not required. This bracing scheme is the same as is employed in my Tuba 36 pro-sound subs, which operate with as much as 1kW input with no discernible vibration.

As for delay, you can use it if you wish, but it's really not required. Most of the pros who use Tubas have systems with delay capabilities, and none of them have found using delay to be audible when the subs are crossed over at 100Hz or lower. The same psychoacoustic and physiologic properties that render low frequencies non-directional also render time adjustment moot, though that situation is radically different above 200Hz or so.

As soon as my latest issue of *audioXpress* arrived, I eagerly read Bill Fitzmaurice's latest contribution: The Table Tuba. Being a horn enthusiast, I always am intrigued by his projects, but I am a bit disappointed by the lack of theoretical background. I think most subscribers would appreciate a few paragraphs about how Bill arrived at this design (and therefore how they might modify it for their own purposes—no guarantees, of course!).

Here is my little bit of "reverse engineering," but I certainly would appreciate the real story from Bill.

The design is obviously a series of conical horns, one feeding into the other. The early part of the horn is a very close approximation of a pure exponential horn with a flare rate of 30Hz (up to about 46″ or a width of 2.56). At that point, the Table Tuba's rate of expansion slows dramatically compared to a true exponential design (which would have a width of 28.66 at 131″).

If you look at exponential/hyperbolic flares (still at 30Hz), you can approximate the Table Tuba by decreasing M as you progress out the horn: by 70″ the M ~ .75, by 90″ M ~ .5, and by 107″ M ~ .25, but at the end M > .25 (**Table 1**).

This certainly makes a more compact horn, but what is the theoretical basis for changing M as you progress down the horn? Of course, something totally dif-

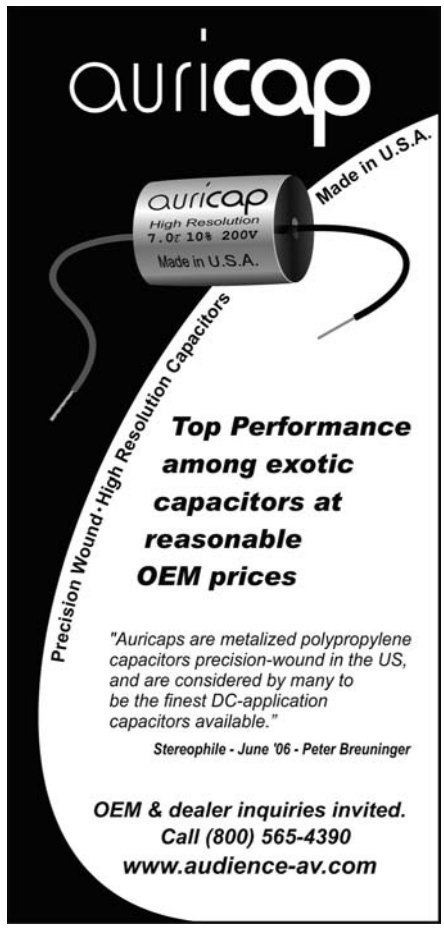

ferent may be happening here, and again, Bill's comments would be most welcome.

TABLE 1: TABLE TUBA DISTANCE WIDTH

M = 1 M = .75 M = .5 M = .25
0 0.75
0.75
15.75 1.14
1.13
20.47 1.3
1.25
35.43 2.01
2.06
46.06 2.68
2.56
62.99 4.29 3.46
3.62
70.87 5.35 4.21 3.31
4
89.76 9.06 6.97 5.39 3.94 4.88
107.48 14.84 11.54 8.62 6.14 5.88
131.1 28.66 22.13 16.42 11.54 14

Mark Parker
dmtp@adelphia.net

Bill Fitzmaurice responds:
There is no M factor in the Table Tuba, because it is neither an exponential nor a hyperbolic horn. The taper is a constant conic through the bulk of the horn, save the flare of the last section.

SUB DRIVER

Having just read Jerry Stump's article ("A Snail Tail Subwoofer," May '06, p. 18), I noticed that he uses a Peerless DVC8 part # 831858. Because I cannot find a match for this driver anywhere, maybe he can suggest where to obtain this driver or another driver that gives about the same performance in his enclosure. He notes that the amplifier is available from Madisound, and his published F_s for this driver = 22, which must be pretty low for an 8″ driver.

Alan Smith
jbandaj@clear.net.nz

Jerry Stump responds:
I am pretty sure the 831858 Peerless driver that I used was a sale item at Madisound probably several years ago. It is alleged to have been in what is now the CC line and has a very good reputation as a high performance but inexpensive sub. It does have a very low F_s and the low Q_{ts} is with the voice coils in parallel. I think it is about .39 for a single 8Ω voice coil.

Here are the parameters for the Peerless driver: F_s 23.4Hz, V_{as} 2.5 ft^3, Q_{ts} .23, 89.9 dB/W, P_e 200W, 1.4mH with the voice coils hooked in parallel. The design in the article has an F_3 of about 45Hz. I used Harris Technologies' BassBox design software.

I wrote the article to demonstrate a concept for putting long port ducts in small enclosures, and the rest of my project was kind of incidental. But here are some suggestions.

Go to the Parts Express website. You will find DIY Resources on the lower left-hand corner of the home page. Click on Speaker Wizard. Follow the steps, and include your intended enclosure internal dimensions. Several products from their catalog will pop up, including port sizes and F_3.

Here are the four drivers that came up on my initial search. I did a quick and dirty job with BassBox to get the approximate rectangular port sizes. The original enclosure dimensions I used for these calculations was about 1.1 ft^3 unless noted.

	Cost	F_s	Q_{ts}	V_{as} (ft^3)	F_3	Port (Rect)
Dayton ST210	49.50	48	.4	1.34	48	1.5 × 8.5 × 16
Dayton DC200	18.65	34	.38	2.04	34	.75 × 8.5 × 14
Pioneer B20GR30-51F	34.50	47	.26	2.44	47	1 × 8.5 × 15.5
HiVi D8G	91.45	40	.53	1.10	40	.5 × 8.5 × 19

You will find *lots* of 8s that will work in enclosures in this size range. The Dayton Quatro is a car sub, the Silver Flute is very low Q, and the Tang Band is an interesting elliptical unit. The Silver Flute seems closest to the Peerless driver.

	Cost	F_s	Q_{ts}	V_{as} (ft^3)	F_3	Port
(2) Dayton 7″ Aluminum	18.15 ea.	36	.42	.75	32	1 × 8.5 × 14 *1.5 ft^3.
Silver Flute W20RC38-04 (Madisound)	31.20	31	.23	2.5	40	1 × 8.5 × 27
Dayton Quatro 8″	49.75	36	.4	.82	31	.75 × 8.5 × 16
Tang Band W69-1042	41.57	35	.35	1.34	38	1 × 8.5 × 17.5

I have used the Dayton 7″ aluminum cone units, and a pair would work well mounted in the Snail Tail enclosure, one on each side, if you bump the internal volume up to about 1.5 ft^3 net. F_3 for that combo is about 32Hz.

Within its acoustic output limits, I have been very happy with my sub and the little PSB Alpha Intro LRs. *aX*

Do you want to win new music from premiere audiophile label Chesky Records? In honor of the upcoming release of their highly anticipated *New York Sessions* SACD jazz series, we're giving you a chance to win up to six new titles from the label. All you need to do is log on to www.audioXpress.com and enter your e-mail address. One grand-prize winner will receive the six-title prize pack, while five runners up will get one disc of their choice. Contest winners will be announced Oct. 31.

Log on to audioXpress.com and register to win today!

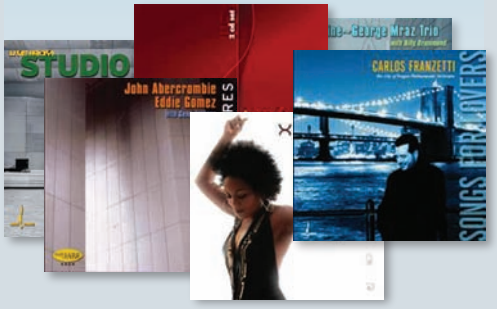

Visit **www.audioXpress.com**

What's New on the aX website?

Web-exclusive content:

- Excel program and Gerber file from George Danavaras' "Equalize The Bass Response Of Your Room" (*aX* 8/06).
- A clearer version of the PCB Stuffing Guide (Fig. 5) from Jan Didden's "Greening of the Behringer Ultra-Drive Pro DCX2496" (*aX* 8/06)
- Classics–History of Audio
  "Feedback Amplifiers" by H.S. Black–from *Bell Laboratories Record*, June 1934
  "Loudness and Pitch" by Harvey Fletcher–from *Bell Laboratories Record*, January 1935

Articles from Past issues:

- "Renovating the Scott 222C, Part 2: Modifications," By Charles Hansen
- "Renovating the Scott 222C, Part 3," By Charles Hansen
- "Renovating the Scott 222C, Part 4: Listening & Measurements," By Charles Hansen

For information on these and others, visit www.audioxpress.com. And don't forget to check out the links to our other magazines, *Voice Coil* and *Multi Media Manufacturer*!