Transformer Myths Debunked/Driver Specs Made Easy

FEBRUARY 2005
US $7.00 Canada $10.00

audioXPRESS

the AUDIO TECHNOLOGY AUTHORITY

Back

a HIGH-END PREAMP for TODAY'S AUDIOPHILE

build a COMPLETE AUDIO SETUP STARTING with a TUBE AMP

TWEETER FIX for VINTAGE HORNS

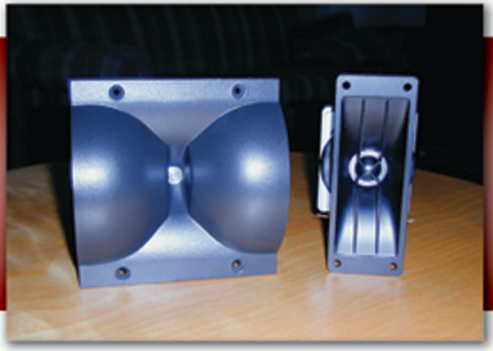

PROTECT YOURSELF from SHOCK HAZARDS

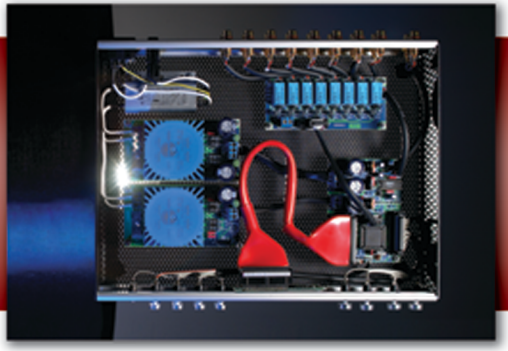

www.audioXpress.com

STANDARD for TESTING TUBES

PLUS: D.H. LABS' NEW CABLES

Tubes

A Study System: Part 1, The SE Amplifier

By Aren van Waarde

How simple can an audio system be, yet still convey the spirit of the music? This series of articles shows you how to build an enjoyable stereo using only two electronic tubes and two full-range loudspeakers.

PHOTO 1: THE AUTHOR'S COMPLETED AMP (SOLID-STATE VERSION, WHICH IS THE SUBJECT OF PART 3).

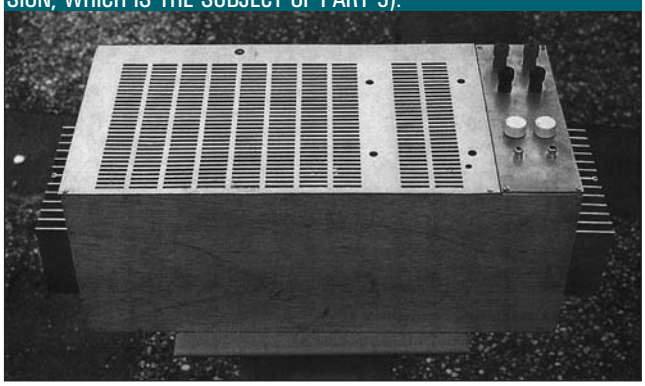

In my living room, I have a nice audio system with tube amplification and large bass horns. But unfortunately, most of my time is spent in the study behind the computer. The quality of the audio produced by the speaker set of this aged Pentium is poor. It was thus high time to heat the soldering iron. Surely I could do better than this!

My study is a large rectangular room (8 × 3½ meters) with a flagstone floor and a low ceiling (2.2 meters). One long and one short wall are covered with books. The other short wall is a French window, opening to the garden. Against the last wall there are two writing desks and an old cupboard (also filled with books). There are several skylights in the ceiling. The acoustics of the room are good.

For various reasons, I decided to give the single-ended tube (SET) amplifier a try. First, my junkbox contained several SE output transformers. Second, I have a large stock of tubes. I can't resist buying them when there is a sale (if you don't believe me, ask my wife!).

BOX GRAMOPHONE REDISCOVERED

Box gramophones from the late 1950s and early 1960s suggested the idea to use just one triode/pentode and one full-range loudspeaker per stereo channel. I have fond memories of a Dual turntable which my aunt and uncle owned. This player was my first introduction to classical music. It suffered from excessive hum, but sounded relatively nice. The Dual used one 6GW8/ECL86 per channel and oval full-range loudspeakers in vented enclosures. [Peter Baxandall designed an amazing one—*Audio Amateur*, Vol. 1, Nos. 2 and 3, 1970—Ed.]

The contents of my junkbox dictated the selection of tubes. It contained many PCL82 (16A8) valves of different brands, which were made for use in television receivers (e.g., Bush TV135). Such sets used the triode ("C" part of the PCL82) as AF preamp or frame time base oscillator. The pentode ("L" part) was the AF output or frame output valve. The 6BM8/ECL82 is nearly equivalent, but it has different heater demands.

The PCL82 was intended for television sets with heaters wired in series. This tube is heated with 16V (AC or DC), 0.3A. The ECL82 was used in sets with heaters connected in parallel. It requires 6.3V and 0.78A. You can buy new-old stock PCL82 valves from several mail-order companies (Alltronics, Antique Electronic Supply, House of Tubes, SND Tube Sales, Tubestore, and Vacuum Tubes Incorporated, to mention just a few). The 6BM8 (ECL82) is still being made—e.g., by Svetlana—so you can buy it virtually everywhere.

So the die was cast: one PCL82 per channel, triode wired as voltage amplifier, and pentode as power output tube. The pinout of the PCL82 is shown in *Fig. 1*.

THREE DIFFERENT PROTOTYPES

This seemed a very simple project, but proved not to be so in real life. The first prototype I made was based on a Svetlana Technical Bulletin for the 6BM8[1]. The Svetlana circuit does not use overall negative feedback, and there is no power supply decoupling between the anodes of triode and pentode. Unfortunately, the circuit did not work with a PCL82 due to problems with stability. Above a certain output level, the amp burst into oscillation. Although I tried to reduce the gain and to decouple the triode and pentode stages, the instability remained. On some DIY projects, amplifiers insist that they are oscillators, and oscillators stubbornly refuse to generate RF.

My second attempt was based on a circuit from a splendid old book: *Praktische Elektronica* (Practical Electronics), by Wim van Bussel (Kluwer Tech-

ABOUT THE AUTHOR
Aren van Waarde is a biochemist working in the field of medical imaging (positron emission tomography). He has worked as a Ph.D. student and a postdoc at several universities (including Leiden and Yale Universities) before accepting tenure at the University of Groningen. His passion for audio started on his ninth birthday when his parents gave him a Philips kit. Most of his current audio equipment (loudspeakers, radios, tuners, pre- and power amps, both tube and solid-state) is homemade.

nical, Deventer, Holland, 1968, vol. 2, p. 98–109). Unfortunately, I own only two of the three volumes.

Van Bussel employed an ECL82. The cathode resistor of the triode was not bypassed with a capacitor and there was negative feedback from the secondary of the output transformer to the cathode of the triode. With a PCL82 from the junkbox, the circuit seemed to be OK. There was no audible oscillation even at high output levels.

However, oscilloscope images indicated that square-waves were not well reproduced. There was visible ringing, because the feedback loop did not match the parameters of the output transformer. Worse still, the sound of the amp was lifeless and boring. I tried various resistor and capacitor combinations in the feedback loop, besides three different output transformers, but this was all to no avail.

At this point I almost decided to give up, until it occurred to me to consult the datasheets of the PCL82. My compatriot Frank Philipse has a huge website, from which you can download data for virtually every tube[2]. Frank's site includes two sheets for the PCL82, reprinted from the *Philips Electronic Tube Handbook*, one dating from 1956 and the other from 1970. Recently he has added sheets from two French sources: *Mazda* and *Radiotechnique*.

The Philips datasheets suggest the following part values. Triode section: plate voltage 200V, anode resistor 220k, cathode resistor 2k2. Pentode section: plate voltage 230V, signal grid resistor 680k, screen grid resistor 1k2 (non-decoupled), cathode resistor 490Ω, primary impedance of SE output transformer 6k.

Triode current is specified as 0.52mA under these conditions. Triode gain is 52× and maximal output of the triode stage 26V RMS at 1.6% total harmonic distortion. Quiescent current through the pentode stage should be 36.6mA in the absence of signal (30mA for the plate and 6.6mA for the screen grid). The signal grid of the pentode needs 7.8V RMS for maximum output power (3.25W at 10% total harmonic distortion). The current consumption should then increase to 42mA (31mA for the plate and 11mA for grid 2).

FIGURE 2: AMPLIFIER SCHEMATIC (ONLY ONE CHANNEL SHOWN, THE OTHER CHANNEL IS IDENTICAL).

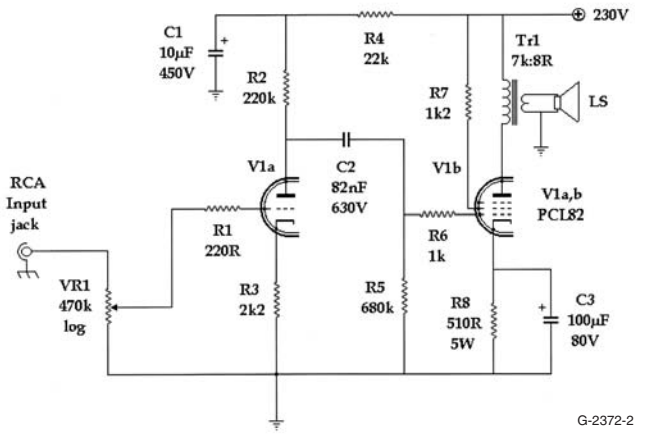

PHILIPS OVERALL

A gain of 52 is reached when the cathode resistor of the triode is bypassed with a capacitor. A high gain was necessary in the past when a ceramic cartridge in the record player produced the music signal. In this modern age of soundcards and CD players, high sensitivity of the amp is not required. Thus, I decided to omit the cathode resistor bypass cap.

I added grid stopper resistors to the triode (220Ω) and pentode signal grids (1k). They may not be absolutely necessary, but they can prevent RF oscillations. Such instability may occur at only a certain setting of the volume control; it may not be directly audible but can manifest itself as increased noise, or a "hard" and "glassy" sound.

I determined the selection of the other parts by the contents of my junkbox. I did not have 490Ω (or 470Ω) resistors with a rating of 2W or greater, but the box contained several 510Ω 5W resistors, so I decided to use them. I had two medium-sized SE output transformers from discarded Philips radios with a 7.5k to 8Ω impedance ratio. Not exactly 6k to 8Ω, but close enough.

A prototype which I built according to the Philips specs worked perfectly and showed no instability on the scope. More important was the sound. Lots of "air" and life—just what I like! So I decided to construct a stereo version, using the Philips schematic and the two aged Philips SE output transformers (for other ways to obtain transistors, see reference 3).

The triode section of my PCL82s drew a little bit more current than the datasheets predicted (0.61 rather than 0.52mA). Finally, I ended up with the part values shown in *Fig. 2*. Measured voltages on the prototype were B+ 228V, plate of triode 84V, cathode of triode 1.35V, cathode of pentode 18.7V; cathode current of triode 0.61mA, and cathode current of pentode 36.7mA.

POWER SUPPLY

Single-ended amplifiers have a poor power-supply rejection ratio, so you need a quiet power supply. I used a CLC filter with additional RC decou-

FIGURE 1: PINOUT AND SOME DATA OF THE PCL82 (DOWNLOADED FROM WWW.TUBEDATA.ORG, PICTURE TAKEN FROM *ELECTRONIC TUBE HANDBOOK*, MUIDERKRING PUBLISHERS, BUSSUM, HOLLAND. THIS BOOK HAS BEEN OUT OF PRINT SINCE 1973). THE NOVAL (9-PIN MINIATURE) TUBE SOCKET IS SHOWN FROM BELOW.

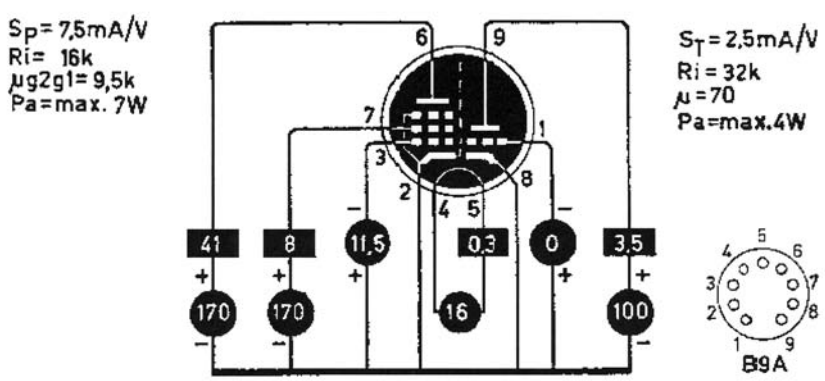

FIGURE 3: PLATE VOLTAGE POWER SUPPLY. THE CIRCUIT FEEDS BOTH CHANNELS OF A STEREO AMPLIFIER.

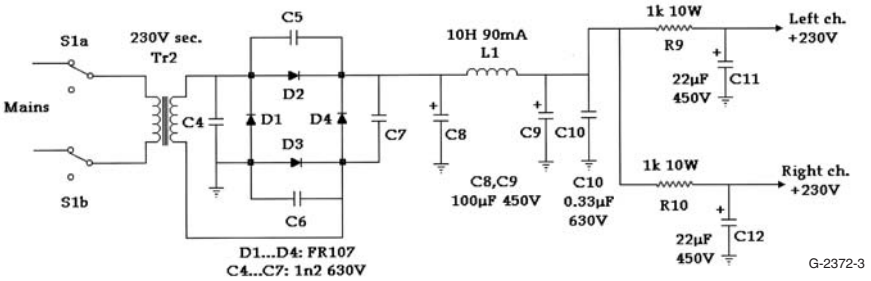

FIGURE 4: RECOMMENDED HEATER POWER SUPPLY (ONLY ONE CHANNEL SHOWN, THE OTHER CHANNEL IS IDENTICAL). DC INPUT TO THIS CIRCUIT SHOULD COME FROM A SUITABLE TRANSFORMER, BRIDGE RECTIFIER, AND LARGE ELECTROLYTIC (4700µF OR GREATER).

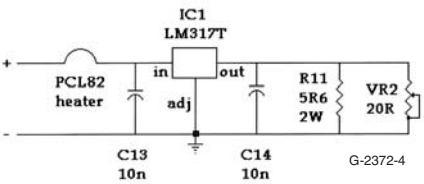

pling networks for channel separation (*Fig. 3*). I used fast recovery diodes in the bridge rectifier and bypassed them with capacitors to suppress switching transients.

You can heat the PCL82 either with AC or DC. I decided to use DC heating in order to minimize hum, but at this point I made a design error. The heater of each tube is fed by a 7815 with its ground pin lifted (two 1N4001 diodes connected in series between ground pin and earth), so that the regulator produces the required 16V. Although this setup does work, it is not wise to heat PCL82s in this way. Since the tubes were designed for series heating, I should have included a current-limiting or slow-start facility in the heater power supply.

When the heaters are fed by a voltage regulator, a large current (up to 1.5A!) flows during the initial few seconds. The heaters then produce a bright light, and after a short interval they begin to glow normally. Cold heaters have a low DC resistance, which causes the high inrush current. The resistance of the wire has a positive temperature coefficient. Therefore, the resistance increases when the heater becomes hot and the current rapidly settles down to the regular 0.3A.

Since I am a lazy fellow, I have not yet changed my heater power supply. The amp has been functioning perfectly with the existing supply for more than two years. Apparently, Philips built tubes with reliable heaters that can stand a lot of mischief! But I advise you to use a more careful heating scheme. The simplest approach is to wire a LM317 adjustable voltage regulator as a constant-current supply (*Fig. 4*).

The lowest output voltage the LM317 can produce is 1.2V. Since in the circuit of *Fig. 4*, the ADJ pin is grounded, Vout will be 1.2V. According to Ohm's Law, a current of 1.2 (V) / 5.6 (Ω) = 0.214A will then flow through R11, which will dissipate a power of 1.2 (V)× 0.214 (A) = 0.26W. The PCL82 needs a heater current of 0.3A. Thus, an additional 0.086A (0.3 – 0.214) should flow through trimpot VR2. The wiper of this trimpot should be set to a value of 1.2 (V)/0.086 (A) = 14Ω. By careful adjustment of VR2, you can obtain a total current of exactly 0.3A.

The LM317 requires a voltage drop of at least 3V for adequate regulation, whereas a voltage drop of 1.2V occurs across R11 and VR2. Thus, the raw DC input to the LM317 should be at least 16 (voltage across PCL82 heater) + 3 + 1.2 = 20.2V. A transformer with an 18V secondary, B80C5000 bridge rectifier, and electrolytic cap (4700µF or greater) will produce more than 22.5V, which is sufficient. The LM317 will require heatsinking, since it dissipates 0.3W/V. In the example, the IC will dissipate 0.3×(22.5–16–1.2) = 0.3×5.3 = 1.6W.

A construction sketch of the amplifier is shown in *Fig. 5. Table 1* contains a parts list.

FIGURE 5: CONSTRUCTION SKETCH OF THE AMPLIFIER. FOR THE SAKE OF CLARITY, ALL COMPONENTS ARE DRAWN IN A SINGLE PLANE. IN REALITY, ALL COMPONENTS ARE MOUNTED PERPENDICULAR TO THE PLANE OF THE TUBE SOCKET. THIS ALLOWS YOU TO USE A SINGLE EARTH (GND) NODE FOR EACH AMPLIFIER CHANNEL AND NOT TWO SEPARATE NODES AS SHOWN HERE.

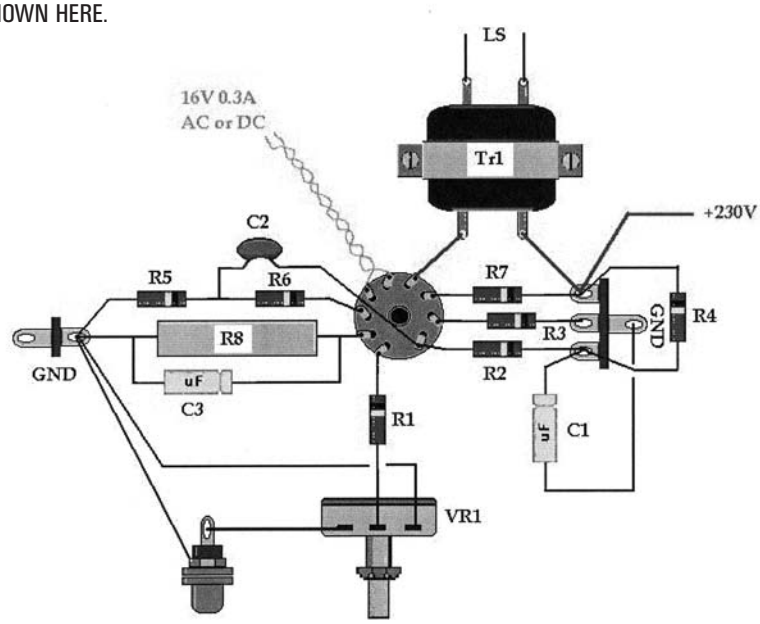

FINALLY, THE SOUND

How does this piece of junk sound? Based on the specs (*Table 2*), I anticipated mediocre performance. What can you expect from 2W per channel, with a harmonic distortion of several percent, a low-frequency cutoff point (–3dB) of 100Hz, and a relatively high output impedance?

Just for fun, I hooked it up to the large horns in my living room during the Christmas vacation of 2001. The audience consisted of my mother-in-law,

my wife, and my (then) eight-year old son (who are music lovers, not audiophiles). After the first few notes, our jaws dropped! We kept listening during the whole vacation period. Every day we played several CDs in succession and enjoyed it greatly. Since then, I use the little amp, with its own dedicated full-range loudspeakers, in our study.

PROS AND CONS

The amp shows the typical pros and cons of fleapower SE amplifiers.

I'll start with the pros. Reproduction of the midrange and treble region of the audio band is simply marvelous. Voices sound as though a real person was in the room, sibilants are not emphasized, and the intelligibility of vocal lines is unsurpassed. The instruments and tonal colors of an orchestra—especially of the strings—are presented in a realistic way. The positions of individual voices within a choir or of individual instruments within an orchestra are very well-defined in all three dimensions. Small details in recordings which cannot be perceived on other audio systems are now clearly audible.

Now for the cons. Poor recording techniques are mercilessly revealed. If the sound engineer has employed any tricks (e.g., close-miked the soloists in contrast to the accompanying orchestra, added a variable amount of electronic reverberation, changed the hall structure between tracks), you will immediately notice and strongly dislike it. Most recordings of popular music sound "artificial" and unpleasant for this reason.

You can use the amp only with loudspeakers of high efficiency (greater

TABLE 2

Measured Specs of Amplifier Prototype

LEFT CHANNEL

Output transformer	Philips part no. 30231 (1960s vintage)
Voltage gain	29.4 × (136mV in for 2W out)
Output power	ca. 2W/8Ω
Frequency response	100Hz...30kHz (–3dB)

(but very slow LF rolloff, 25Hz still visible)

RIGHT CHANNEL

Output transformer	Philips part no. 1080770 189 (1938 vintage)
Voltage gain	29.4 × (136mV in for 2W out)
Output power	ca. 2W/8Ω
Frequency response	95Hz. . . 20kHz (–3dB)

(slow LF rolloff, 40Hz still visible)

TABLE 1

PARTS LIST
(NB part numbers with accents indicate parts for 2nd channel)

AMPLIFIER

R1, R1′	220Ω 0.5W carbon
R8, R8′	510Ω 5W wire-wound (NB 490Ω according to datasheet)
R6, R6′	1k 0.5W carbon
R7, R7′	1k2 0.5 or 1W, carbon or metal oxide
R3, R3′	2k2 0.5W, carbon or metal oxide
R4, R4′	22k 0.5W, carbon or metal oxide
R2, R2′	220k 0.5 or 1W, carbon or metal oxide
R5, R5′	680k 0.5W, carbon or metal oxide
VR1, VR1′	variable resistor 470k, audio taper
C2, C2′	82nF foil cap, 400V or more (I used 1500V caps from dB Systems; use the best cap you have)
C1, C1′	10µF 450V electrolytic
C3, C3′	100µF 80V electrolytic
V1, V1′	PCL82 (16A8) (I used NOS valves from Philips)
Tr1, Tr1′	Output transformer 6k: 8Ω, 50mA or more (see ref. 3)

Two 9-pin (noval) tube sockets

B+ POWER SUPPLY

D1, D2, D3, D4	FR107 fast recovery diode (1000V 1A)
R9, R9′	1k, 10W wire-wound
C4, C5, C6, C7	1n2 630V MKT
C10	0.33µF 630V MKT
C11, C12	22µF 450V electrolytic
C8, C9	100µF 450V electrolytic
L1	Choke, 10H, 80mA or more (I used Amroh, NOS)
S1A, S1B	DPDT mains switch
Tr2	230:230V transformer (in the US, you need a 115:230V transformer)

RECOMMENDED HEATER POWER SUPPLY

Tr3	230:18V transformer, 1A or greater (in the US, you need a 115:18V transformer) (not shown in Fig. 4)
B1	B80C5000 bridge rectifier (80V 5A) (not shown in Fig. 4)
IC1, IC1′	LM317T adjustable voltage regulator (TO-220 case)
R11, R11′	5.6Ω, 2W (or 5W)
VR2, VR2′	trimpot 20Ω, cermet type
C13,C13′,C14,C14′	10nF ceramic or multilayer
C15	4700µF 35V electrolytic (or greater capacitance value) (not shown in Fig. 4)

Heatsinks, insulating material for the two LM317 ICs (TO-220)

REFERENCES

1. The 6BM8 schematic is at www.svetlana.com/graphics/TB/No10fig2.gif.
2. You can reach Frank's site through the domain name www.tubedata.org.

   The URL of the mother site is: home.planet.nl/~frank.philipse/frank/frank.html, with mirror sites in Germany, frank.pocnet.net and in Poland, www.mif.pg.gda.pl/homepages/frank. There is no relationship between Frank Philipse and Philips multinational, although his family name could suggest otherwise.
3. Of course, not every reader's junkbox will contain suitable output transformers. But everyone can buy these from various suppliers. Here are some suggestions (ranging from dirt cheap to more expensive solutions). You can buy second-hand, used transformers very cheaply from surplus stores (e.g., Play Things of Past, 9511 Sunrise Blvd, J-23, Cleveland, OH 44133; www.oldradios.com (subject to availability); or Jan Wüsten Elektronik, Rodauer Straße 38, 64372 Ober Ramstadt, Germany, www.fragjanzuerst.de). More expensive alternatives are new transformers from the Canadian manufacturer Hammond (e.g., Hammond P-T125E, P-T125CSE, P-T125DSE, P-T125ESE). Prices range from $60 to $75 for a pair of output transformers. Contact Jan Wüsten or Antique Electronic Supply (6221 S.Maple Ave., Tempe, AZ 85283, www.tubesandmore.com). Another solution is to buy a set of transformers for the "Scherzo" amplifier from Audiokit in Italy, www.audiokit.it. The price is 230 Euros for one power transformer and two output transformers. This is the most expensive solution, but rumor has it that the output transformers sound excellent, and potted versions are available.
4. Luca Chiomenti has described his own experiences with a PCL82 amplifier in the Italian magazine *Costruire HiFi* (nos. 24, 29, 36, 43). Luca calls his amp "Lo Scherzo." Scherzo means "joke," but "scherzo" is also a musical term. For various ways to increase the damping factor (i.e., to lower the output impedance) of a single-ended 16A8 amplifier without global negative feedback, study the schematics at Mr. Eguchi's website: members. nifty.ne.jp/rhizome/trnk. The language is Japanese, but the schematics are clear and the captions are in English. Mr. Eguchi has built at least six 16A8 amplifiers with various circuit topologies! A simple but effective PCL82 push-pull amplifier is shown on the following page: edimba.tripod.com/PCL82_PP/PCL82_PP.html. The language is Swedish, but you should be able to easily understand the circuit and the accompanying text.

than 90dB/W/m), lacking complex crossovers. Once I tried it on old bookshelf speakers from Acoustic Research (AR 4×)—forget it! But it sounds very good on single driver full-range speakers. I have listened for extended periods to the following models: 1) Jericho horns (Fostex FE208 Sigma driver, large backloaded horn), 2) La Petite Audiophile (Fostex FE103 Sigma driver, column-shaped vented enclosure), and 3) a speaker design of my own (Monacor SPH-60X driver, small vented cabinet). In the US, consult websites of Madisound, Parts Express, Solen, and other *aX* advertisers for drive units which are similar to the SPH-60X.

The most serious flaw is, of course, the following: low bass is missing. On my horn speakers, deep bass notes are audible but they have a smaller amplitude than the rest of the audio spectrum. On the two vented speaker systems which I tried, low bass is virtually completely absent. Above 100Hz, all is OK. Below 70Hz, you hear nothing.

I can live with this because the rest of the audio range is so good. If I choose to realistically reproduce a grand piano or the pedal notes of a large pipe organ, I should go to the living room. But if I wish to hear the tiniest details of a recording or experience the ambience of the recording venue as realistically as possible, I settle in the study and start "dreaming the hours away" (yes, old jazz recordings can sound good as well!). It is amazing that small transformers from table-top radios can produce such excellent sound. The folks at Philips must have used smart winding techniques.

If you build the amp with bigger output transformers (i.e., the more expensive Hammonds or the Audiokits, see reference 3), your frequency range will be extended (to less than 40Hz). But you'll need to pay a lot more.

For additional information on PCL82 amp building, consult various audio magazines and the world wide web[4].

Part 2 will describe the construction of a pair of single-ended tube amp-friendly speakers.

The diagrams shown here were drawn with TubePad5, a free program designed by amateur radio operator WD4NKA. *aX*

Electronic Crossovers
Tube
Solid State
Passive Crossovers
Line level
Speaker level
Custom Solutions
We can customize our crossovers to your specific needs. We can add notch filters, baffle step compensation, etc....
All available as kit
Free Catalog:
Marchand Electronics Inc.
PO Box 18099
Rochester, NY 14618
Phone (585) 423 0462
FAX (585) 423 9375
info@marchandelec.com
www.marchandelec.com

Back

Driver Parameter Assessment Using Transient Capture Analysis

By Mark Sanfilipo

Try this mathematical approach to derive driver parameters and see how it compares to conventional measurement techniques.

The methods and advantages of time-domain analysis are well known and widely discussed in the literature of loudspeaker system design. This article discusses a quick method of deriving driver parameters from the voltage response as measured at the drivers' input terminals. I'll also provide worked examples and conclude with comparison driver specifications as determined by this method and standard MLS analysis.

A TIMELY SOLUTION

Fourier analysis shows that an event—be it audio or acoustic—can be described in two ways. Better known in speaker builder circles as the time domain and the frequency domain (*Fig. 1*), the coordinates of these two descriptions (or, more accurately, domains) are dimensionally reciprocal, with one describing the event in units of time and the other describing the event in units of reciprocal time, or as reciprocal time is better known, hertz.

Transforming the event from one domain to the other is accomplished mathematically by application of the Fourier transform (time to frequency domain), or the inverse Fourier transform (frequency to time domain).

$$x(t) = a_o + \sum_{k=1}^{\infty} (a_k \cos(2\pi k f_o t) + b_k \sin(2\pi k f_o t))$$

THE FOURIER TRANSFORM

When implemented on a PC with a fast processor, the Fourier transform—or perhaps more to the point, the computationally efficient, Fast Fourier transform—can provide a real wealth of information in a very short period of time. It's impressive just how much information can be derived from that impulse!

But without resorting to such complex computations, and the hardware/software needed to accomplish them, is it possible to derive useful information with a basic complement of measurement gear, a calculator, and some mathematical effort? This article investigates an algebra-based method for accomplishing just that.

FIGURE 1: TIME- AND FREQUENCY-DOMAIN MEASUREMENTS.

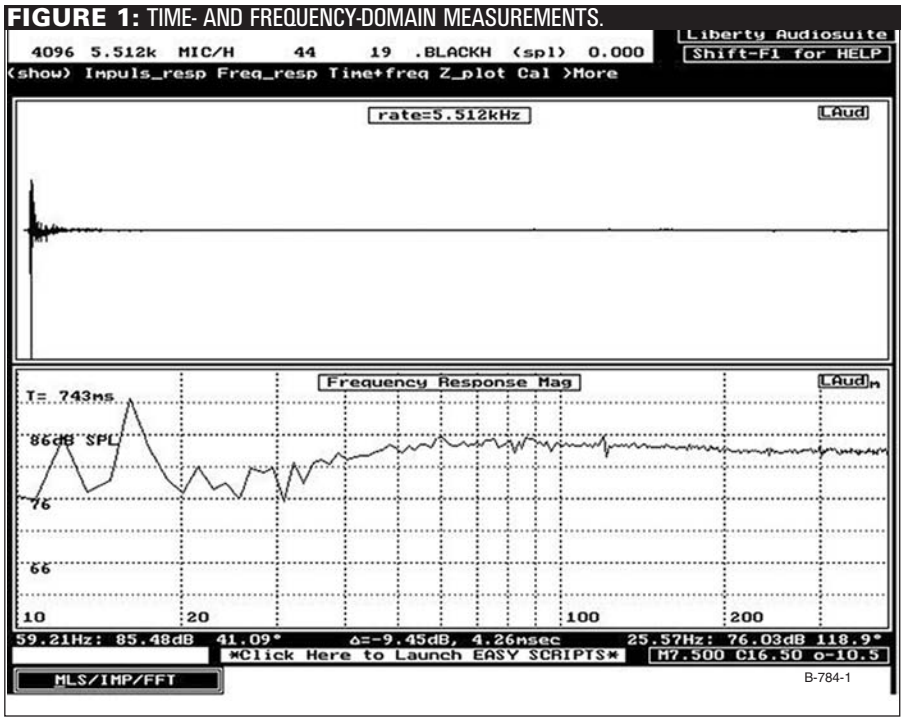

FIGURE 2: THE CIRCUIT VERSION OF THE TEST SETUP, INCLUDING THE ELECTRICAL EQUIVALENT OF THE DRIVER.

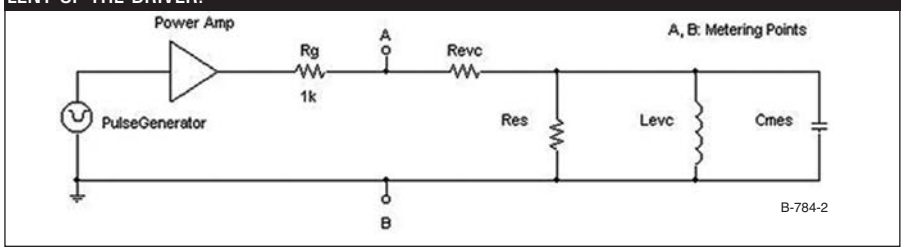

ABOUT THE AUTHOR

Mark Sanfilipo has been involved in various dimensions of audio since the early 1980s. Beginning as a pro-sound engineer with an interest in exploring ways of building better quality studio and stage monitors, what began as an advanced hobby would later grow into a professional endeavor. Mark splits his time between New York and southern Ontario wine country where he and his wife Penny keep busy raising five kids—all of whom are budding audio enthusiasts.

THE IMPULSE TO MEASURE

The setup for measuring the driver parameters is relatively straightforward. At the source end of the chain is, of course, the impulse source. This could be a pulse generator or square-wave generator capable of kicking out appropriate step functions.

The next link in the setup is the power amp set, of course, at a suitably low level to avoid: (a) blowing up the driver being tested and/or (b) pushing the driver into nonlinear operation. It's easy to see how effortlessly a pulse can send a driver into nonlinear operation (or even launch a cone out of its frame!)—so be careful.

The best bet when setting impulse levels is to start with the amp's gain set so low as to present no audible reaction from the driver and then slowly bring it up, watching both the driver and whatever you're using for a display (PC monitor or oscilloscope). I found setting the gain at a level just enough to produce clean, readable, repeatable results, but no higher, worked best. You'll need to spend some time experimenting with both levels and scope settings. If you are planning on measuring more than one of the same driver, save yourself some time and write down the settings.

The resistor Rg has a chosen value many times greater than the driver's free-air resonance impedance peak, and is put in place so that the driver end of the circuit is, in effect, looking at a constant-current source (*Fig. 2*). The common practice is to use a 1kΩ resistor or a resistor with a value 10× higher than the Zpeak. But even these values may be a little low. With an Rg value of 10× the Zpeak, the actual current can drop ≈ 1dB at resonance. Once again, experimentation is key.

You record the voltage response at the input terminals by using a digital storage oscilloscope, or, if one is not available, an ordinary oscilloscope will prove adequate as long as it has a high-persistence CRT.

If you're on a strict budget or would simply rather spend more on the loudspeaker system than the hardware used to build it, electronics surplus outlets are a great place to shop for affordable generators, oscilloscopes, meters, and

TABLE 1

VALUES	DEFINITIONS
C	Speed of sound in air, ~345 m/s.
Rg	The resistor in the circuit to make the driver think it is looking at a constant-current source. (Value: Rg>>Zpeak.) (Ω).
Revc	DC resistance of the driver's voice coil. This should be measured before commencing impulse testing for reasons that will become clear shortly (Ω).
Res	Electrical resistance due to suspension losses (Ω).
Lces	Electrical inductance due to suspension compliance (H).
Cmes	Electrical capacitance due to driver cone mass (F).
Bl	Driver's force factor (N/A).
Mms	Mechanical mass of driver diaphragm assembly including voice coil and air load (Kg).
Cms	Mechanical compliance of driver's suspension (m/N).
RMS	Mechanical resistance of driver suspension losses (Ω).
Q_{ES}	Electrical Q of driver.
Q_{MS}	Mechanical Q of driver.
Sd	Effective projected diaphragm area (m^2).
V_{AS}	Equivalent closed air volume of driver compliance (m^3).
α	Damping constant.
η0	Reference efficiency.
ρ	Density of air (1.18 kg/m^3).
ω	Natural angular frequency (rad/s).
ω0	Angular resonance frequency (rad/s).

Need help with your speaker designs? BassBox Pro & X•over Pro can help!

Design speaker boxes with BassBox Pro

Design speaker boxes for any space: car, truck, van, home hi-fi, home theater, pro sound, studio, stage, PA and musical instruments. Import acoustic measurements. For example, the response of a car can be imported to simulate the in-car response.

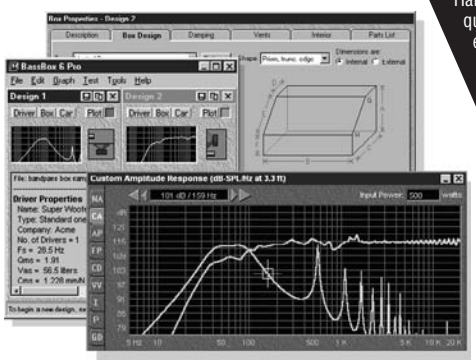

$129 plus S&H

Sophisticated Driver Modeling and Advanced Box Design

• Multiple drivers with isobaric, push-pull and bessel options. • 3 dual voice coil wiring options. • "Expert Mode" dynamically analyzes driver parameters. • Design closed, vented, bandpass and passive radiator boxes. • "Suggest" feature provides fast box design. • All box types account for leakage losses and internal absorption. • Advanced vent calculation. • Bandpass boxes can be single or double-tuned with 2 or 3 chambers. • 22 box shapes (shown below). • Open up to 10 designs at one time. • Analyze small-signal performance with: Normalized Amplitude Response, Impedance, Phase and Group Delay graphs. • Analyze large-signal performance with: Custom Amplitude Response, Max Acoustic Power, Max Electric Input Power, Cone Displacement and Vent Air Velocity graphs. • Includes a helpful "Design Wizard" for beginners.

HARRISTECH

Harris Tech *Pro* software for Microsoft® Windows can help you quickly create professional speaker designs. Our software is easy to use with features like "Welcome" windows, context-sensitive "balloon" help, extensive online manuals with tutorials and beautifully illustrated printed manuals. We include the *world's largest driver database* with the parameters for many thousands of drivers.

For more information please visit our internet website at:

www.ht–audio.com

Tel: 269-641-5924
Fax: 269-641-5738
sales@ht–audio.com

Harris Technologies, Inc.
P.O. Box 622
Edwardsburg, MI
49112-0622
U.S.A.

Design crossovers with X•over Pro

Design 2-way and 3-way passive crossover networks, high-pass, band-pass or low-pass filters, impedance equalization, L-pads and series or parallel notch filters. Its Thiele-Small model provides professional results without complex testing.

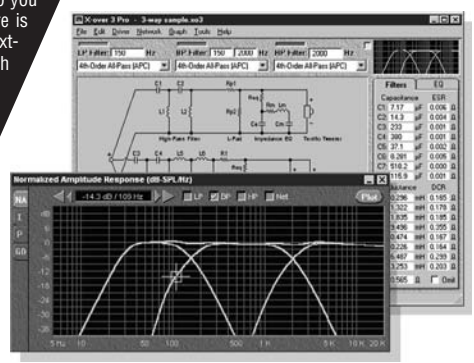

$99 plus S&H

Passive Crossover Filters and Scalable Driver Modeling

• 1st, 2nd, 3rd and 4th-order "ladder" filter topologies. • Parallel crossover topology. • 2-way crossovers offer Bessel, Butterworth, Chebychev, Gaussian, Legendre, Linear-Phase and Linkwitz-Riley filters. • 3-way crossovers offer All-Pass Crossover (APC) and Constant-Power Crossover (CPC) filters. X•over Pro's capabilities scale to fit the amount of driver data. • A crossover, filter or L-pad can be designed with just the nominal impedance of each driver. • With full Thiele-Small parameters, impedance equalization can be designed and the performance graphed. • Graphs include: Normalized Amplitude Response, Impedance, Phase & Group Delay. • Graphs can include the full speaker response including the box. • Estimate component resistance (ESR & DCR). • Calculate the resistance of parallel or series components.

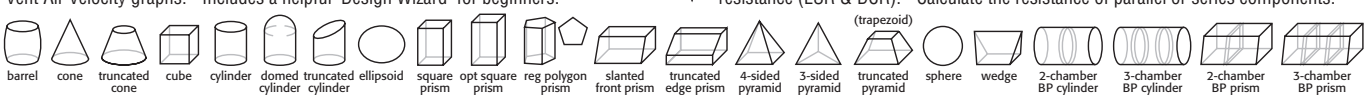

Copyright © 2002 by Harris Technologies, Inc. All rights reserved worldwide. BassBox is a trademark of Harris Tech. Other trademarks belong to their respective companies. Harris Tech reserves the right to make changes without notice. All prices are in U.S. dollars.

The British specialists in tube amplifiers and pre-amplifier kits, loudspeaker kits and related publications

Visit our informative website:
www.worldaudiodesign.co.uk
Enter our HD83 competition on-line

KiT88 integrated amplifier kit

300b PSE monobloc kit

Kel84 integrated amplifier kit

Series II modular pre-amplifier kit

World Audio *design*

World Audio Publishing Ltd.
12a Spring Gardens.
Newport Pagnell.
Milton Keynes.
MK16 0EE. England

tel/fax: 00 44 1908 218836
e-mail:inquiries@worldaudiodesign.co.uk

so on. You'll find quite a few of these places on the Internet. The hardware I used was military surplus gear, purchased from just such an outlet. I've used this sort of gear for years and have found the discounted price paid nets you certainly used, but generally well maintained, equipment. Always ask for the service manuals if available.

On the other hand, if you have a PC equipped with a reasonably good quality sound card (particularly useful if it can function in full duplex mode), a bit of 'net surfing will, in all likelihood, uncover software capable of turning it into a signal generator.

REAL-WORLD MATHEMATICS

Consider the concepts of *Table 1* and definitions of *Fig. 3*. For my measurements, I used the data presented by the first maxima (Y0, t0), first minima, (Y1, t1), and second maxima (y2, t2). I also measured Revc prior to pulsing the driver. Here's the equation sequence for determining the driver's parameters:

$$T = t_2 - t_0 \quad \text{(sec.)} \quad (1)$$

$$\omega = \frac{2 * \pi}{T} \quad \text{(rad/sec)} \quad (2)$$

$$f = 1 - \frac{y_0 - y_2}{y_0 - y_1} \quad (3)$$

$$\alpha = \frac{2 * \ln(f)}{T} \quad (4)$$

$$\omega_0 = \sqrt{\omega^2 + \alpha^2} \quad \text{(rad/sec)} \quad (5)$$

$$\varphi = a\tan(\alpha / \omega) \quad (6)$$

$$t_0 = \frac{T}{4} + \frac{a\tan\left(\frac{\alpha}{\omega}\right)}{\omega} + \frac{m * T}{2} \quad \text{(rad/sec)} \quad (7)$$

$$A_0 = \frac{y_0 - y_1}{1 + f} \quad (8)$$

With Revc known, you then calculate:

$$i * Re\,vc = y_0 - A_0 - y_q \quad \text{(volts)} \quad (9)$$

$$i = \frac{y_0 - A_0 - y_q}{Re\,vc} \quad \text{(amperes)} \quad (10)$$

You can now calculate Cmes, Res, and Lces:

$$Cmes = \frac{i * Re\,vc * e^{\alpha * t_0}}{\omega_0 * A_0 * Re\,vc} \quad \text{(farads)} \quad (11)$$

$$Res = -\frac{1}{2 * \alpha * Cmes} \quad \text{(Ohms)} \quad (12)$$

$$Lces = \frac{1}{\omega_0{}^2 * Cmes} \quad \text{(Henries)} \quad (13)$$

Pulsing the driver once again, this time with an added mass of known weight, you can then calculate Mms:

Mms = ((Madd)/((fs/fsam)2) – 1 (Kg)
Where: Madd = Mass added to cone (14)
Fs = ω/2π (Hz) (15)
Tmadd = t(y2) – t(y1) (sec.) (16)
= period found after adding mass.
Fsam = (2π/Tmadd)/ 2π (Hz) (17)

Knowing Mms, you can then calculate Cms:

$$Cms = (1)/(4\pi^2 \times (fs)^2 \times Mms) \quad \text{(m/N)} \quad (18)$$

Finally, you have:

$$Vas = \rho \times c^2 \times Cms \times Sd^2 \quad \text{(liters)} \quad (19)$$

$$BL = (Mms/Cmes)^{0.5} \quad \text{(N/A)} \quad (20)$$

FIGURE 3: VOLTAGE STEP AND SUBSEQUENT OSCILLATIONS.

WHERE:
AN = VOLTAGE MAGNITUDE
I * REVC = VOLTAGE STEP
Y0, T0 = COORDINATE VALUE OF FIRST MAXIMUM (VOLTS, SECS.)
Y1, T1 = COORDINATE VALUE OF FIRST MINIMUM (VOLTS, SECS.)
Y2, T2 = COORDINATE VALUE OF THE 2ND MAXIMUM (VOLTS, SECS.)
YQ = PRE-PULSE VOLTAGE
T = PERIOD OF THE OSCILLATION (SECS.)

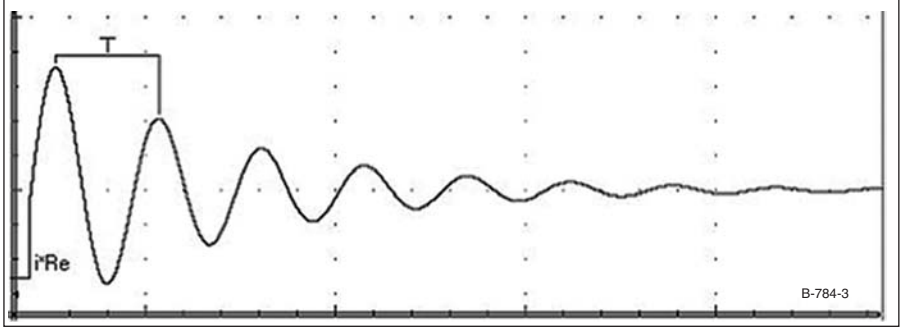

$Qmes = Res \times Cmes \times \omega o$ (21)

$Qes = Qms \times Revc/Res$ (22)

$Qts = 1/((1/Qms) + (1/Qes))$ (23)

$\eta 0 = (4\pi^2 \times fs^3 \times Vas)/(c^3 \times Qes)$ (24)

$SplRef = 112.2 + 10 \times Log(\eta 0)$ (dB Spl/1W/1m) (25)

A WORKED EXAMPLE

I performed a series of trials on each of four KEF B-139 woofers, two of which were from earlier SP1044x series and two of which were a more recent version, the SP1333x. The numbers shown are taken from a measurement run done on one of the older KEFs. I measured all drivers using both LMS and Liberty Instrument's Laud v. 3.12.

I'll present here for quick comparison the results as taken from a Laud measurement and as derived from the impulse response, plugging the various (y,t) values into the series of equations as previously mentioned.

Laud	**The Math Method**
$f_s = 36.46$Hz	$f_s = 36.93$Hz
$Q_{ES} = 0.699$	$Q_{ES} = 0.696$
$Q_{MS} = 6.987$	$Q_{MS} = 5.85$
$Q_{TS} = 0.635$	$Q_{TS} = 0.622$
$V_{AS} = 53.6$ ltr	$V_{AS} = 53.2$ ltr
Bl = 12.152 T-m	Bl = 12.22 T-m
Cms = 0.3131 mm/N	Cms = 0.3081 mm/N
Mms = 60.864 gm	Mms = 60.287 gm
$\eta 0 = 0.357\%$	$\eta 0 = 0.377\%$
SPLref = 87.5dB	SPLref = 87.97dB
fsam = 22.72Hz	fsam = 22.86Hz

For a final, certainly more definitive comparison, I modeled both sets of parameters in LEAP with the intention of seeing how system responses would compare (*Fig. 4*).

The frequency response plots match to within 1dB at all frequencies of interest. Note the 1dB/division y-axis scale.*aX*

FIGURE 4: MATH VS. MEASUREMENT COMPARISON

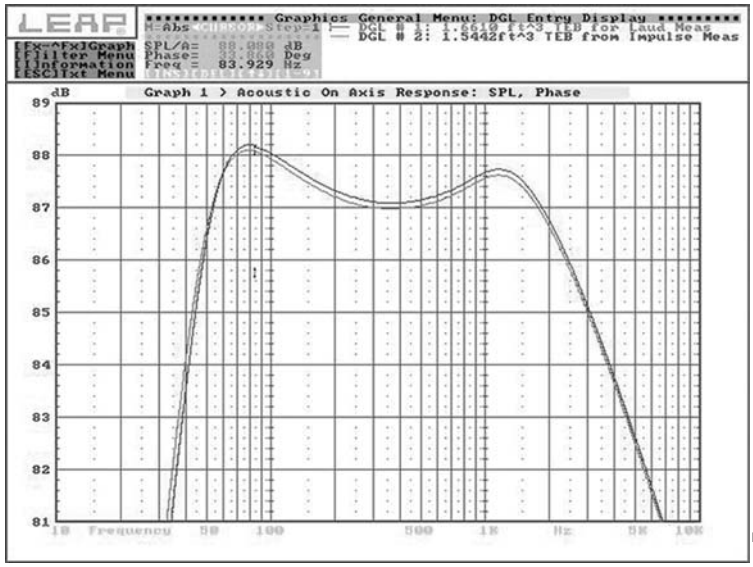

B-784-4

GRANDMOS
The SMART amplifier

2 Audiophile Masterpieces
for the DIYer

TRIPHON
The ULTIMATE crossover system

GRAND MOS SILVER DESIGN

TRIPHON Système ELECTRONIC

✔ Probably, the nearest approach to : "**A STRAIGHT WIRE WITH GAIN**".
✔ High end 2 x 100 WRMS / 8 ohms MOS-FET amplifier.
✔ SILVER plated PTFE / fiberglass printed circuit boards.
✔ SILVER plated connections.
✔ Military grade components.
✔ Only J-FET and MOS-FET audio transistors.
✔ NO CAPACITOR in the sound path *.
✔ Minimum wiring and easy construction.
✔ Outstanding performances.
✔ Absolute Transparency and Sound.
✔ Extremely reliable.
✔ Steady performances over years.

* : *under certain conditions*

To complete the GRANDMOS (or any good quality amplifier) we have designed the **TRIPHON system** :
✔ Musically neutral and transparent.
✔ 3-way electronic crossover.
✔ 6 or 12 dB/octave slope (true LINNKWITZ-RILEY filter).
✔ 4-channel Class A minimalist MOS-FET amplifier for MID and HIGH frequencies.
✔ Choice of cut-off frequency.
✔ PTFE / fiberglass printed circuit boards.
✔ Fully discrete component technology.
✔ SILVER plated connections.
✔ Minimal wiring.

by
Selectronic
L'UNIVERS ELECTRONIQUE

In U.S. : **VERASTARR**
3468 Cedar Valley Court, Smyrna, GA 30080
www.verastarr.com

>> **Detailed information** on **www.selectronic.fr** or by e-mail to : **selectrocom@selectronic.fr** <<

A Transconductance Tube Tester Test Standard

By Joel Hatch

This article discusses building a transconductance test standard for calibrating and checking a mutual conductance/transconductance type tube tester.

Tube testers come in a wide variety of styles and types. In my opinion, the better ones use some scheme to measure the tube's transconductance (also referred to as mutual conductance).

Note: For this article, I define transconductance as the small change in plate current caused by a small change in grid voltage. Author Alan Douglas has written a book titled *Tube Testers and Classic Electronic Test Gear* that provides a great tutorial on how tube testers work[1].

While reviewing the calibration procedure for my Hickok 800K[2], I found a diagram of a standard to use in calibrating my tester provided by Mr. Schoo. However, it looked a bit too cumbersome to set up and seemed impractical to use on my other tube testers.

Looking further on the 'net, I couldn't find a transconductance standard, so I decided to make up a simple test standard that anyone could use. I nicknamed it "Gut Checker™," because it quickly checks whether or not the "guts" of a tube tester are working properly. I settled on an octal-style plug for my final design, with aluminum housing to help protect it from abuse and minimize the possibility of shocking the user.

Operation is quite simple. Set up your transconductance type tube tester to test a 6SN7 style tube, insert the test standard, depress the "Test" button, and read the tube tester's meter. Compare the indicated reading on the tube tester with the test standard, and you should be within the tube tester's specifications. If not, you may need to calibrate or repair your tube tester.

Because I didn't have a good idea on tube tester accuracy from reading through the manuals of my two tube testers, I made up some values. I targeted the transconductance test standard to be better than 5% accuracy, assuming that most technology 50 years or so old is probably only accurate to within about 5–10% anyway. My results were a bit better than that.

DESIGN PROCESS

First, I wondered how high a voltage was present on the pins of a tube tester. I measured my Hickok 800K and RCA WT-110A. I was somewhat surprised to find a basic difference in what the two tube testers used for biasing, input signal, plate voltages, and overall design philosophy in measuring a tube's parameters.

Apparently, the design of the Hickok 800K—and its close relatives, the 600 and 6000 series—doesn't really provide a clean DC supply of voltage. It provides what amounts to a varying AC voltage. (Subsequent to measuring it

PHOTO 1: OCTAL TO BANANA PLUG TEST SOCKET

ABOUT THE AUTHOR

Joel Hatch served in the US Navy from 1975–1981 as an electronic technician (nuclear). He then attended Ohio State University, receiving a BA in biochemistry and an MS in nuclear engineering (instrumentation). While working at OSU's reactor lab, Mr. Hatch completely renovated and updated the reactor's safety and control system's old 50s/60s era "tube" nuclear electronics into solid-state/ICs. In 1993, Mr. Hatch left OSU and worked several years for the Air Force developing test methods and procedures for electro-optic components used in air and spaceflight with emphasis on nuclear survivability. Mr. Hatch returned to Ohio in late 1997 and continued to work in the fields of space and satellite technology evaluating and testing electro-optic and solid-state electronic devices and components in cosmic radiation environments. Currently, Mr. Hatch works as a reliability engineer for a large telecommunications company developing tests and verifying operation of telecom amplifiers in extreme environmental stress conditions, and continues as a consultant in the nuclear and space radiation effects field.

and looking around for more information, I've heard it referred to as "pulsing AC.") The input grid signal is on the order of 2.5V RMS, and may be adjusted higher, depending on the tube selected. On the other hand, the RCA WT-110 Cardmatic type tube tester has a filtered DC, less than 2V RMS ripple voltage (probably suitable for technology 50 years ago) on the plate and a very stable grid input signal of 1V RMS.

From my own experience, I encourage all electronic designers and technicians to become familiar with what signals are being applied to their tubes and measure their tube testers' biasing and stimulus voltages and signals. It is relatively cheap—compared to potentially ruining good tubes—to purchase an octal tube saver from a surplus supply store and periodically measure all voltages. As an added benefit, for experimental purposes, you can also measure the parameters with a tube installed. Reference 3 contains a couple of useful websites for looking up information on tube testers.

Next, I looked into what type of tube base I could purchase. Though I use both octal and miniature tubes in my preamplifiers and line stage amplifiers, I settled on a base/plug that could fit into an octal type of tube base. Octal bases are larger, having more room to fit in the electronic components/parts required for the transconductance standard and more easily obtained from a wide variety of sources, both new and surplus.

I obtained representative octal plug (bases) from Angela Instruments, Antique Electronic Supply, Jameco, and WPI. I ended up using the WPI plug base, which is actually the same as an Amphenol CP-8. By the way, I didn't have any luck sourcing out a blank/empty 9-pin miniature base.

For experimental purposes, I made a breadboard out of 3/16″ thick phenolic (garolite XX, available from McMaster-Carr), and drilled out eight holes to mount banana plug style colored jacks (*Photo 1*). I soldered 18 AWG wire between the banana plug lugs and the octal plug's pins. This provided a convenient way to attach banana to mini-hook style jumpers between the tube tester or transconductance test circuit and transconductance standard's breadboard, or, on occasion, a 6SN7 or 12SN7 tube for evaluation, measurement, and comparison purposes.

TUBE TRANSCONDUCTANCE

Then I needed to decide on a value of transconductance to design the standard. As an initial target, I selected the 6SN7/12SN7 tube as the baseline element for this project. I have several brands of these very common tubes on hand for use in my line stage amplifier.

I downloaded the tube's data sheet from the internet[4] and reviewed the specifications/transconductance graphs for this tube under various bias conditions. I correlated this to the data contained on the Hickok tube tester's self-

CAUTION

1. The case of the 10M45S is connected to the anode and may be at a high voltage potential. Shorting this to the case may shock you if you touch it. Prior to potting the circuit, make sure it doesn't touch the external aluminum sleeve (housing) wall. As in all electronic projects, use common sense when dealing with voltages greater than about 25V.
2. After making up your transconductance standard, use a multimeter to ensure the case does not touch any internal circuitry. Also, perform a set of tests using 300V on the plate and measuring the outside case temperature to determine how long you can operate the device before it becomes too hot.

Chelmer Valve Company Ltd

The Stables, Baddow Park, Great Baddow, Chelmsford
Essex, CM2 7SY, England.

email: sales@chelmervalve.com ** **tel. 44 1245 241 300 fax. 44 1245 241 309** www.chelmervalve.com

for High Quality Audio Tubes

Everybody in the audio tube business knows that the justly famous brand names of yesteryear like Brimar, GEC, Mullard, RCA , Telefunken etc. etc. are scarce and often quite expensive.
Although we supply all major brands as available (and we have many in stock) our policy is to offer a range of tubes, all new and mostly of current manufacture, the best we can find from factories around the world, which we process to suit audio applications. The result – **CVC PREMIUM** Brand. Our special processing includes selection for **low noise, hum & microphony** on pre-amp tubes and controlled **burn-in** on power tubes to improve **stability** avoid tubes with weaknesses etc.

****** **A selection of CVC PREMIUM Audio Tubes** ******

PRE-AMP TUBE		POWER TUBES		POWER TUBES cont.		RECTIFIERS cont.	
ECC81	5.90	EL34G	8.30	6L6/ 5881 WXT	9.00	5Y3GT	4.80
ECC82	5.90	EL34 (JJ)	8.50	6V6GT	5.50	5Z4GT	5.80
ECC83	5.90	EL34(Large Dia)	11.00	6080	11.50	SOCKETS ETC.	
ECC85	6.60	EL84	5.50	6146B	11.00	B9A (Ch or PCB)	1.60
ECC88	5.70	EL509/519	13.00	6336A	48.00	Ditto, Gold Pl.	3.00
ECF82	5.50	E84L/7189	7.50	6550WA/WB	15.00	Octal (Ch or PCB)	1.80
ECL82	6.00	KT66	11.00	7581A	12.00	Ditto, Gold Pl.	4.20
ECL86	6.30	KT66R	22.50	807	10.70	UX4 (4-Pin)	3.60
EF86	6.00	KT77	13.20	811A	11.80	Ditto, Gold Pl.	5.50
E80F Gold Pin	11.00	KT88	13.50	812A	31.00	4 Pin Jumbo	10.00
E81CC Gold	8.00	KT88 (Special)	17.00	845 (New des)	33.50	Ditto, Gold Pl.	13.00
E82CC Gold	9.00	KT88 (GL Type)	30.00	RECTIFIERS		5 Pin (For 807)	3.30
E83CC Gold	8.50	PL509/519	9.90	EZ80	5.10	7 Pin (For 6C33C)	4.70
E88CC Gold	8.80	2A3 (4 pin)	15.50	EZ81	6.00	9 Pin (For EL509)	5.00
6EU7	7.00	2A3 (8 Pin)	17.50	GZ32	15.50	Screen can B9A	2.20
6SL7GT	8.90	211	23.00	GZ33	15.50	Ditto, Gold Pl.	4.30
6SN7GT	5.30	300B	45.00	GZ34	7.20	Top Con. (For 807)	1.70
6922	6.40	6C33C-B	25.00	GZ37	15.50	Ditto, (For EL509)	2.00
7025	7.00	6L6GC	7.60	5U4G	6.30	Retainer (For 5881)	2.20
		6L6WGC/5881	8.90	5V4GT	5.00		

****** **And a few 'Other Brands', inc. rare types** ******

5R4GY *Fivre/GE*	8.50	6SL7GT *STC*	13.00	13E1 *STC*	100.00	6550C *Svetlana*	18.00
5R4WGY *Chatham*	10.50	6SN7GT *Brimar*	13.00	211/VT4C *GE*	120.00	6146B *GE*	18.50
5Y3WGT *Sylv.*	6.50	12AT7WA *Mullard*	6.00	300B *JJ*	56.00	A2900 *GEC*	15.00
6AS7GT *Sylv.*	12.00	12AU7 *Mullard*	12.50	300B *Svetlana*	80.00	E88CC *Mullard*	14.60
6AU6WC *Sylv.*	5.10	12AY7 *GE / RCA*	8.40	300B *WE*	195.00	F2a *Siemens*	145.00
6B4G *Sylv.*	27.00	12AZ7 *West'h.*	8.00	805 *USA*	52.00	KT66 *GEC*	69.00
6BW6 *Brimar*	5.40	12BH7A *RCA*	14.00	5842A *GEC*	15.00	KT88 *JJ*	17.40
6BX7GT *GE / RCA*	9.00	12BY7A *GE*	9.50	6080 *Telef.*	13.30	KT88 *Svetlana*	35.00
6CG7/6FQ7	8.50	12E1 *STC*	12.50	6550A *GE*	31.50	PX25 *KR*	128.00

ALL PRICES IN U. K. POUNDS £

Please note extras: carriage charge (£3.00 in U.K.) & in EEC VAT (17.50%). When ordering please state if matching required (add £1.00 per tube) . Payment by credit card (VISA, AMEX etc.) or TRANSFER or CHEQUE (UK only).
FAX email or POST your ORDER for immediate attention – We will send PROFORMA INVOICE if required.
MILLIONS OF OTHER TUBES & SEMICONDUCTORS IN STOCK!

***** Valve Amplifiers sound better still with CVC PREMIUM Valves! *****
******

PRICE VALIDITY TO END APRIL 2002 – ASK ABOUT ANY TYPES NOT ON THIS LIST

contained data sheet. A normal transconductance for this tube is approximately 2600µS. (Throughout this article, the measurement unit for transconductance is siemens, which replaces the now-obsolete mho).

After looking through various websites to see what others have done, I didn't find anything quite to my liking. The closest thing I could find was a constant-current source load using an IXYS switchable current regulator on Pete Millett's website—a site that is great for providing the RCA HB3 tube reference manual as well[4]. I ordered a few of the model 10M45S, TO-220 packaged devices from Digi-Key's website, and performed some initial tests to determine their suitability. IXYS' website has several good tutorials and suggestions for using this product[5].

I set up a test circuit for measuring a tube's transconductance using a schematic diagram from an article appearing in the Jan. 1964 issue of *Radio-Electronics* (*Fig. 1*)[6]. Using typical operating values for a tube contained in the tube's specification sheet, you can determine a tube's transconductance, Gm, as follows:

1. Apply typical operating voltage to the tube's plate (for 6SN7, approximately 125V DC)
2. Apply typical bias voltage to the tube's grid (for 6SN7, approximately –1 to –2V DC)
3. Apply a small test signal to the tube's grid (for experimentation I use 100mV RMS)
4. Measure the voltage drop across the load resistor, R1 (for experimentation I used a value of 100Ω for the test load resistor and a measured voltage drop of 27.0mV RMS)
5. Calculate the tube's transconductance by the following formula:

$$Gm = \Delta\, Vload\ (RMS)/[\Delta\, Vsignal\ (RMS) \times Rload\ (Ohms)]$$

In these experimental values, the 6SN7 tube's transconductance is calculated as follows:

$$Gm = 27.0mV\ RMS/[100mV\ RMS \times 100\Omega]$$

$$Gm = 0.0027S = 2{,}700\mu S$$

FIGURE 2: PLOT OF TRANSCONDUCTANCE VS. CURRENT SETTING RESISTOR, RX (WHERE RX IS EQUIVALENT TO THE SERIES R3 + R4 IN *FIG. 4* AND R1 IS SET TO 0Ω).

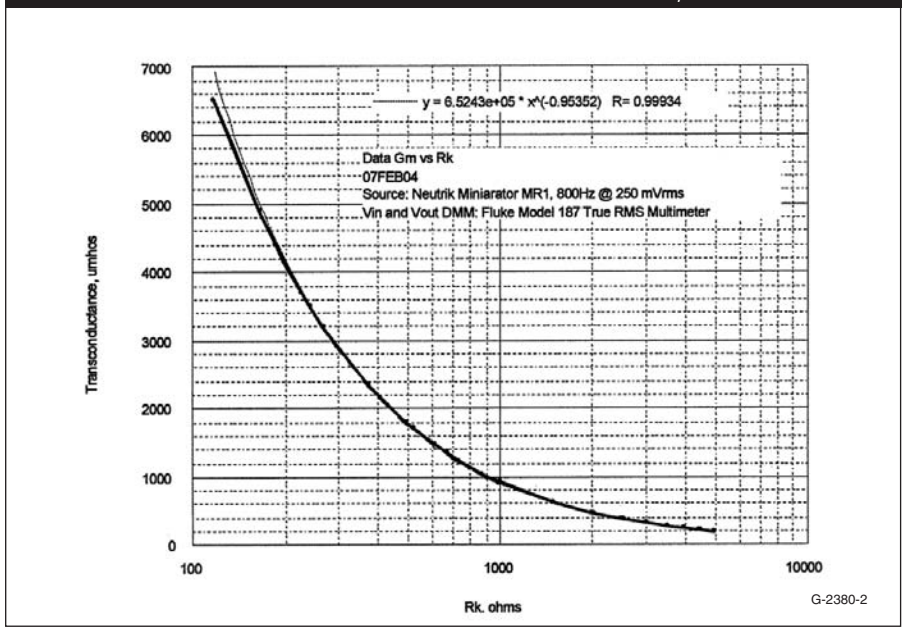

FIGURE 1: TEST CIRCUIT FOR MEASURING DUT TRANSCONDUCTANCE ADAPTED FROM "CIRCUIT DIAGRAM FOR MEASURING TRANSCONDUCTANCE OF VACUUM TUBES," FROM *RADIO ELECTRONICS*, JAN. 1964[6].

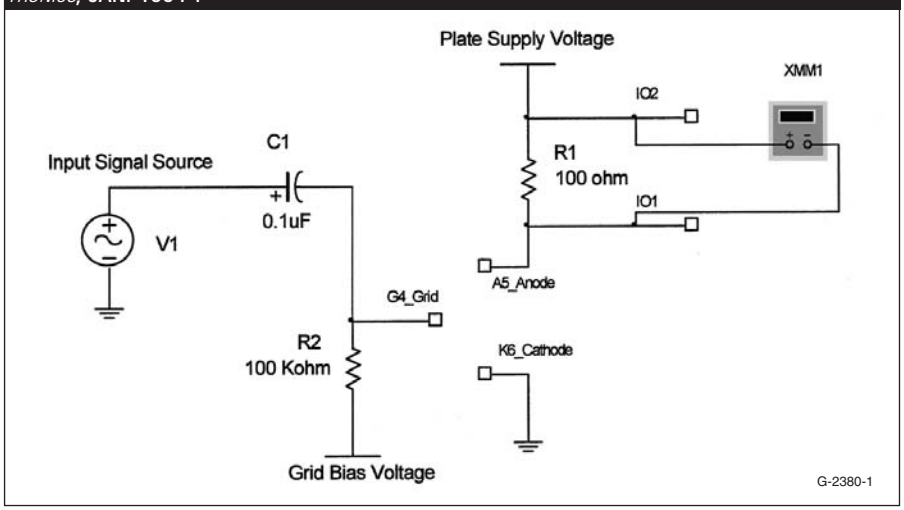

As noted in the *Radio Electronics* article, if the DC voltage drop across the test load resistor is greater than about 1% of the power supply's DC voltage, reduce the value of the load resistor.

EVALUATION

After checking out a few more tubes to make sure the test circuit agreed with both of my tube testers, I connected the 10M45S device into the standard test circuit diagrammed in the datasheet and evaluated various values of anode to cathode voltage versus cathode current setting resistor, Rx, and various input signals to confirm (and measure) plateau currents. My input signal source was set over a range of 100mV RMS to 5V RMS, and the load resistor, which I used to measure the current change at the drain of the 10M45S, was 100Ω or 50Ω. I used a Fluke Model 187 True RMS Multimeter to measure all voltages and Agilent E3615A and HP 6209B power supplies for bias and plate voltages. I used a B&K Model 3011B Function Generator or Neutrik Miniarator MR1 for input signals.

The IXYS 10M45S worked very well for the initial evaluation. Some benefits of this device are its rated operating voltage (up to 450V), TO-220 package for easily attaching a heatsink to dissipate heat generated at the higher operating voltages, and its easy procurement from a large supply house—Digi-Key. I decided to order some addi-

tional precision resistors to perform more detailed checks of the device's operating points and develop a set of operating curves from which to select the desired transconductance value I was looking for.

As you can see in *Fig. 2*, the plot of transconductance versus the setpoint resistor Rx in IXYS data sheet and R3 + R4 in *Fig. 4* is a log/log relationship. This was great! As an engineer, I like nice solutions/equations for data plots.

Figures 3A and *3B* show data for another set of tests to measure input voltage versus transconductance. Here, a small problem developed, as the 10M45S has an internal bias point that limits it to operate to only around 3V or so. After this point, the input circuit of the device becomes overloaded/swamped and the transconductance decreases.

The transconductance standard is fairly frequency insensitive over the audio band, less than 0.5% deviation, which is a bit better than the Fluke 187 DMM is technically specified to measure, so I also re-measured the sensitivity using a Tektronix TDS 220 Oscilloscope for comparison purposes to ensure accuracy. *Figure 5* shows a plot of the frequency response versus transconductance with a constant input voltage.

Using a single transconductance standard for both the Hickok and RCA required a bit of a compromise. The Hickok's higher input signals needed to be attenuated, or they would overdrive the 10M45S.

As noted in *Figs. 3A* and *3B*, the IXYS current regulator circuit I was using as a basis for the standard would start to decrease in its output/transconductance, reducing to approximately 2% or 3% of the stated value at an input grid voltage of approximately 2.5V RMS. This was a bit lower than what the Hickoks were supplying when set to measure tubes under the standard GOOD-REJECT setpoint parameters, and a bit too close for when the Hickok was set to measure transconductance directly off the meter (first red calibration dot on English dial). I wanted a transconductance standard that was more consistent between different types of tube testers.

The solution was to add a simple voltage divider at the input, resistors R1 and R2, which divided the input voltage in half. *Figure 5* is a schematic diagram of the final transconductance standard circuit. I selected R3 and R4 (*Fig. 4*) for a value of 284Ω, equivalent to 3,000μS. Half of this is 1,500μS, which, coincidentally, is right in the middle of the Hickok's meter face when the calibration dot on the English dial is set to read 3,000μS full scale. Because of the higher value of transconductance, the running temperature of the transconductance standard increased a bit; however, it didn't seem to affect its stability at all.

Figure 6 shows a plot of one of the final units operating at a temperature of 105°C. Too hot for fingers, but the unit was stable after operating for over 24 hours at this temperature with drift less than 0.5% (tolerance of my test and measurement equipment). Note that the input voltage divider improves the device's insensitivity to higher input signal voltages. The transconductance is pretty steady and does not change by more than 2% of its initial setting until approximately 4.5V RMS. This is a significant improvement over the initial circuit and allowed for calibration

FIGURE 3A: INPUT SIGNAL LEVEL VS. TRANSCONDUCTANCE.

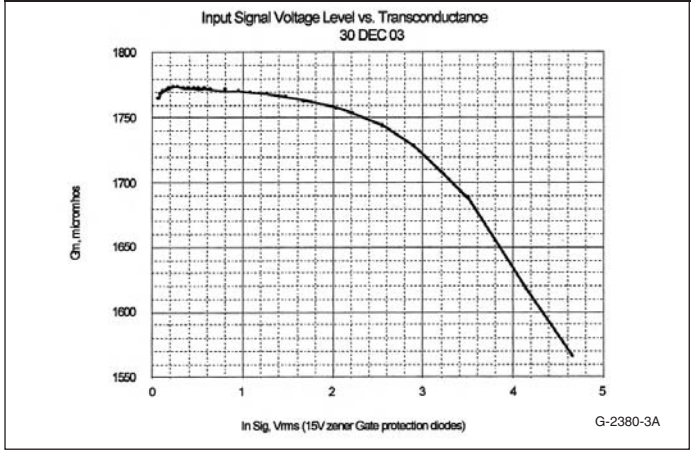

FIGURE 3B: INPUT SIGNAL LEVEL VS. TRANSCONDUCTANCE.

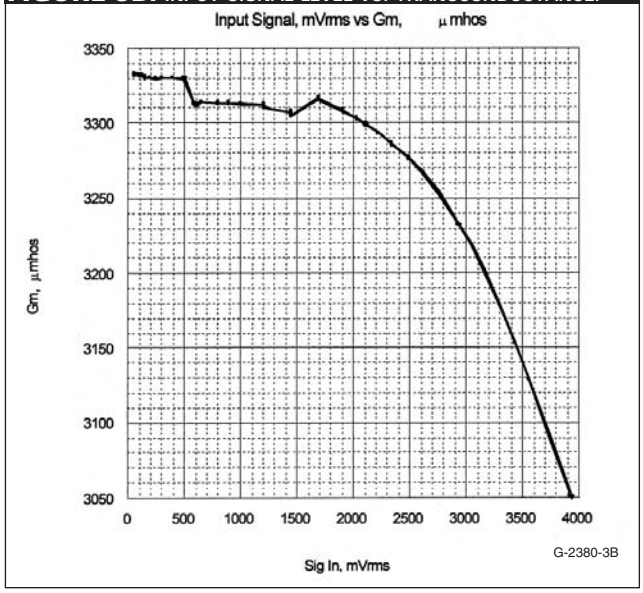

checking of both the RCA and Hickok 800K tube testers.

FINAL PROTOTYPE DESIGN

After success with a couple of prototypes (*Photo 2*), I decided to refine the layout of the board and make a PCB that would fit on top of the octal plug and allow an aluminum tube to fit over the exterior for safety, ruggedness, and reliability. I use ExpressPCB, which provides quick turnaround, reasonable prices, and free layout software. I was able to design a set of ten boards for under $100. As it turns out, standard 1″ thin wall aluminum tubing fits snugly over the CP-8 octal plug, so I didn't need to do any special machining to "hog out" an aluminum tube.

I was able to fit a single test standard in a package the size of a standard octal tube (*Photo 3*). I securely fastened the aluminum tube to the octal plug with a hot-melt glue gun, then backfilled the inside with non-conducting epoxy my machine shop friend had (Hysol E-60NC by Loctite). I used a "slip on" style TO-220 heatsink (Aavid HS210 from Digi-Key) instead of the larger bolt-on type seen in the prototype photo (*Photo 2*).

I think any heatsink that will fit inside your case without touching the external aluminum case should work, provided you don't plan to leave it turned on for long periods of time (more than 5 or 10 minutes), so that the case doesn't become too hot to touch. I leave it up to the experimenter/ technician to measure and determine how hot their standard gets over time when used on their own tube tester.

During the prototype stage, I managed to blow up two of the IXYS current regulators—another reason to buy a few units prior to experimenting. One device failed while testing it on the Hickok tube tester, and the other on the test bench. I reviewed my design and the notes provided by IXYS, and subsequently added diodes D1, D2, and D3. Diodes D1 and D2 protect the 10M45S

PHOTO 2: FINALIZED PROTOTYPE CIRCUIT BOARD WITH LARGE HEATSINK (FOR TESTING).

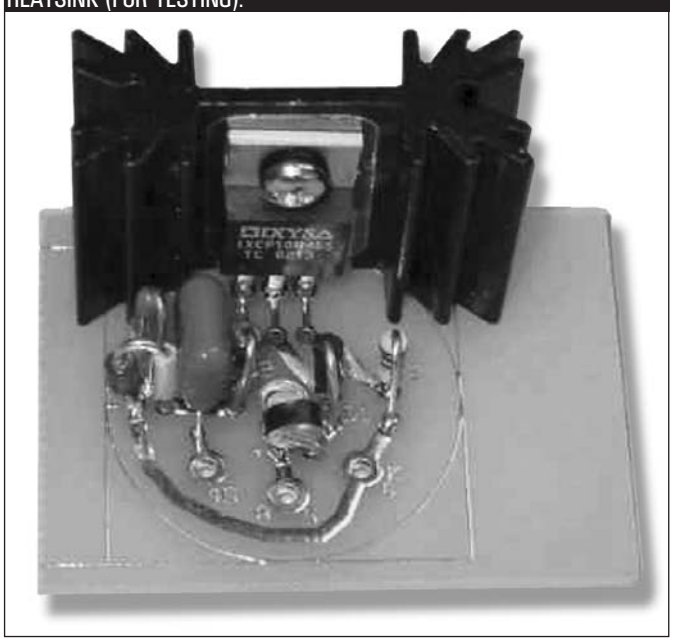

FIGURE 4: CIRCUIT DIAGRAM OF TRANSCONDUCTANCE TEST STANDARD AND PROTOTYPE CIRCUIT (NOTE: R3 AND R4 SELECTED FOR TRANSCONDUCTANCE VALUE OF 3,000µS WHEN SETTING THE INPUT VOLTAGE DIVIDER RESISTOR, R1 = 0Ω AND 1,500µS WHEN R1 = 100KΩ, SEE TEXT).

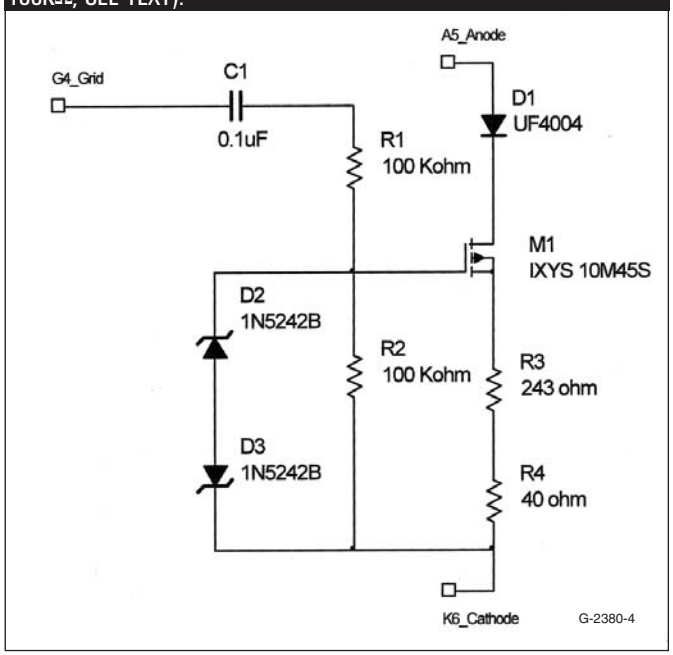

FIGURE 5: PLOT OF FREQUENCY DEPENDENCY ON OUTPUT GM.

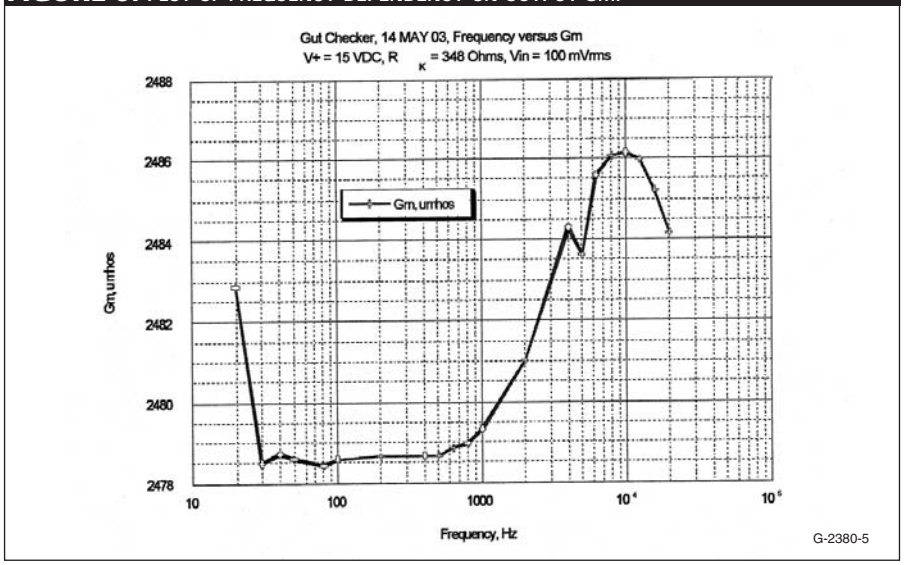

PHOTO 3: HOUSING ASSEMBLY FOR 1,500µS TRANSCONDUCTANCE STANDARD.

gate from an overvoltage condition on the input, and D3 protects the device from reverse current transients—this was the likely culprit for the unit failing in the Hickok. Because I didn't have an ESD-safe table, the second unit was probably damaged as a result of plugging and unplugging from the test breadboard. Subsequent to these added diodes, no more units failed during the remainder of the production of the first set of ten prototypes.

I carried out final measurements for a series of ten devices. The standard deviation of all these devices was less than +2/–0% of the 1,500µS, at levels of input signal voltage to 3.0V RMS. I tailored each of the standards by splitting the setpoint resistor, Rx, into two standard resistor values of 243Ω and 40.2Ω, manufactured by Vishay, with a tolerance of 1% (available from Mouser). I bought several values of each resistor and sorted through them prior to pairing them up. You could probably buy ten of each resistor and select the two that provide you with 284Ω.

This will give you a transconductance standard within ½% of 1,500µS under most operating conditions I ex-

Ordinary Turntable.

Extraordinary Performance.

Ok. It's not an ordinary turntable. It's anything but. Newly invented chassis construction, massive aluminum platter, mounting, motor, bearings, belts, arm, and power supply make a line of turntables that outperforms all that have come before it.

New-Line TD 800 Series
THORENS

Distributed in the USA by Trian Electronics, Inc. • 5816 Highway K, Waunakee, WI 53597 • 608-850-3600 • www.triancorp.com • e-mail: thorens@triancorp.com

BUILDING THE TUBE TESTER "GUT CHECKER"

1. Rough-cut a single circuit board (*Photo 4*) from the master printed circuit board set. A band saw or shear press works fine for this.
2. Trim down the edges of the TT "Gut Checker" circuit board. The outer circle is 1″ diameter. I use this as my reference for fitting within the octal plug base. After I've sanded it down, I test-fit it to the base (*Photo 5*).
3. Clean circuit board off with isopropyl alcohol and soft, non-shedding cotton rag to remove residue from the sanding process and make board ready for soldering (*Photo 6*). This board has already been pre-tinned from the PCB supplier (Express PCB).
4. Insert "grid" input signal dropping resistors R1 and R2. In *Photo 7*, R1 is a direct short, as this transconductance standard is going to be used in an RCA WT-110A Tube Tester. For Hickok 800 style tube testers, R1 and R2 form a dropping network to set the maximum input voltage applied to the gate of U1 to less than 2V RMS.
5. Insert diode D1 and solder in place. I found that when laying out the board, it is easier to place a line where the cathode of the diode is to be positioned (*Photo 8*). Tube testers, such as the Hickok 800 style, apply AC voltage to the plate of tubes during test. Diode D1 prevents damaging the current regulator, U1, by reverse voltage between cathode and plate terminals.
6. Insert diodes D2 and D3 and solder into place. Zener diodes, D2 and D3, are connected back to back (*Photo 9*) and protect the gate of U1 from input "grid" signal overvoltage.
7. Insert transconductance setpoint "cathode" resistors R3 and R4 and solder into place (*Photo 10*). In this example, the combined resistance, "Rx" (see *Fig. 2* and Plateau Current versus External Resistance of IXYS 10M45S—data sheet) was set to 284Ω to simulate the normal transconductance of a 6SN7 triode of 2700μS.
8. Insert input coupling capacitor, C1, and solder into place (*Photo 11*).

PHOTO 4

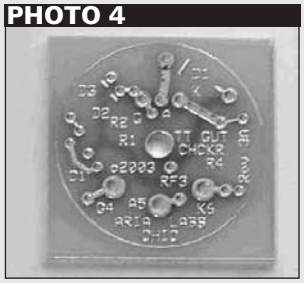

PHOTO 5

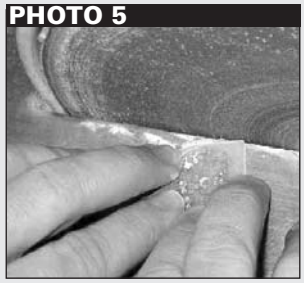

PHOTO 6

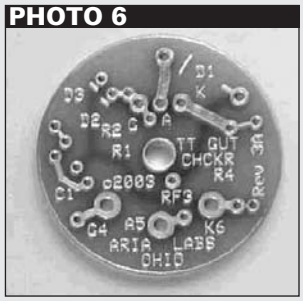

PHOTO 7

PHOTO 8

PHOTO 9

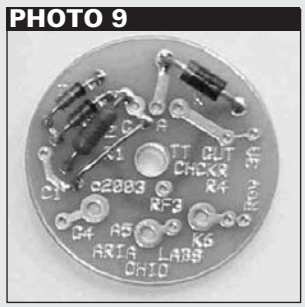

perimented with. I also matched the input resistors—R3 and R4—within 0.1kΩ (essentially the tolerance of my multimeter reading) of each other—though once again, if you bought several 100kΩ resistors and sorted through them, you should be able to find a pair that match within the limits of your multimeter's resolution.

SUGGESTIONS

Since the transconductance standard does not need a heater, these pins are not connected. You could connect a precision high power resistor between the heater pins 7 and 8 to check out whether the filament supply is operating properly under load conditions. I did not include this provision, because it may cause the transconductance test standard to heat up too much when operated for several hours. For short-term readings—less than a couple of minutes—the heating shouldn't be a problem. The unit drifts very little, less than ½%, with respect to temperature up to 100°C (*Fig. 6*).

For my applications, since I run my tubes under constant DC supply conditions, I preferred to use the RCA tube tester, which has much better plate voltage regulation and a more stable and lower voltage input stimulus signal. The only problem with the RCA is the meter face doesn't directly read out

FIGURE 6: INPUT VOLTAGE VS. GM AT HIGH TEMPERATURE.

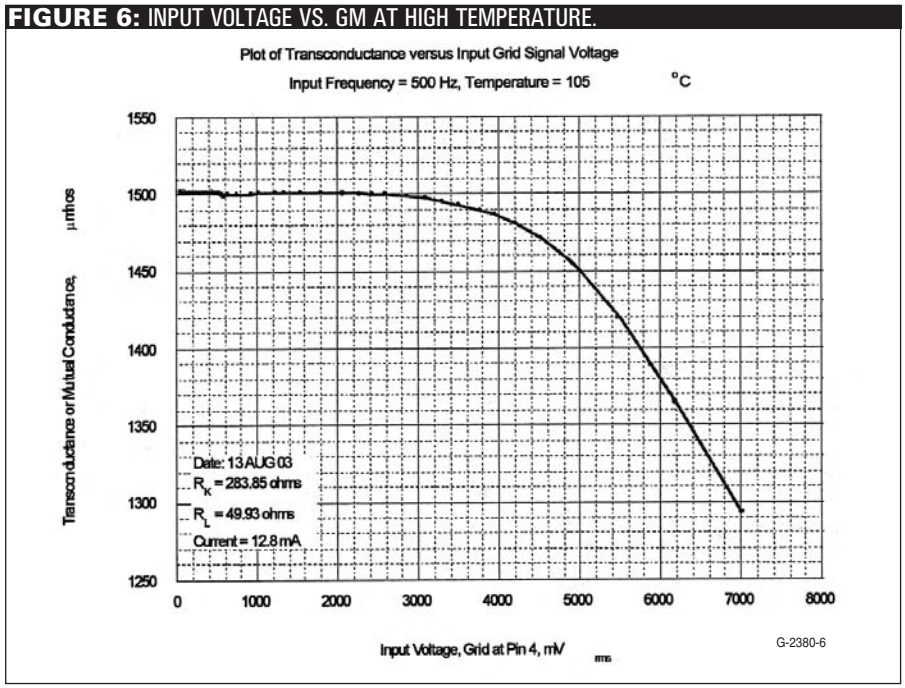

in microsiemens. I've seen this on some military-type Hickok tube testers as well. However, by subsequently calibration-checking it against a couple of known transconductance standards, I was able to come up with a meter correction factor.

This technique should work with most transconductance type tube testers and provide an indication of your meter's accuracy across its full-scale operating range. If you have a non-µS reading type of meter—for example, a linear scale from 0 to 10, 0 – 125, and so on—by building a set of standards at 1,000 and 2,000 and 3,000µS, you should be able to calibrate and check most tube testers' panel meters for linearity/accuracy and determine the corrections needed. For standard µS reading meters, you should be able to check the tube tester's linearity. I recollect from my old Navy training that most panel meters usually read best between ¼ scale and ⅞ scale. In this particular example for the Hickok 800K, the reading will be right in the middle of the scale.

I found that the most effective way to solder wire to the octal plug pins is to cut a 6″ length of 18-gauge stranded wire, removing the sheath from the last inch of the wire. Then mount the blank octal plug base into a small vise and fill each pin with solder. This prevents the Hysol (if you use it to seal/pot the test standard) from flowing out the open bottoms of the pin holes. (Yes, I found out the hard way the first time!) Then connect the small piece of 18AWG wire by heating the pin first, slipping in the wire until the insulation just touches the top of the plug, which leaves approximately ⅜″ of wire protruding through the bottom of the pin.

After the solder cools, trim off the wire, flush with the bottom of the pin. Then trim the top section of wire to mount the circuit board. I found this easier than trying to cut the wires to their exact finished size, then stripping them, and holding them in place while soldering into the octal tube base plug. The longer wires made it much easier to deal with, and it was a simple matter

REFERENCES

1. Alan Douglas, *Tube Testers and Classic Electronic Test Gear*, Sonoran Publishing, LLC, © 2000.
2. Daniel Schoo, "Calibration Testing of the Hickok Model 600A Tube Tester," version 3.0, Sept. 2002, from Mr. Straub's website: http://www.0wned.org/%7Ehstraub/cal600.htm.
3. I have found the following two websites very helpful in providing information on Hickok tube testers. Bama's site also has lots of information on other testers, such as my favorite, RCA WT-110: http://www.0wned.org/%7Ehstraub/tubes.htm http://bama.sbc.edu/.
4. Pete Millett's website: http://www.pmillett.addr.com/. Pete also has RCA tube data sheets listed at http://www.pmillett.addr.com/tubedata/HB-3/masterindex.html.
5. IXYS Corporation website: http://www.ixys.com (see various data and information in the High Voltage Current Regulator category).
6. Overholts, R.W., "Transconductance and How to Measure It," *Radio-Electronics*, Jan. 1964.
7. MIL-HDBK 217 F, Reliability Prediction of Electronic Equipment.
8. Circuit board layout and manufacture: http://www.expresspcb.com.
9. I have also found these two books helpful in the design of the transconductance standard:

Latest Instruments for Servicing Radio-Television, Coyne School Publications, 1963.

Slurzberg & Osterheld, *Essentials of Radio-Electronics, 2nd Ed.*, McGraw-Hill Book Co., Inc., 1961.

Do you suffer from

Audiophilia Nervosa?

Audio Asylum - an institution for the care of audiophools.

Audio Asylum is a free and independent resource staffed by a small, volunteer group of audio lunatics. Our mission is to create a unique community for stimulating discussion and helpful interchange without the flame wars and slow load times often found at other sites.

Here's what inmates have to say:

"This is what the Asylum actually is: USEFUL."

"... the Asylum has taken me to a higher level of knowledge then I ever could have acquired on my own."

"I have saved hundreds...maybe thousands of dollars on equipment through the good advice received here. And not a banner ad in sight!"

"...the best return on your audio dollar will be the Asylum!"

Get committed today.

AudioAsylum.com

9. (optional) Insert resettable PolySwitch fuse, Raychem TR250-080, into RF3 and solder into place. This resettable fuse (*Photo 12*) limits current through U1 to less than 180mA should R3 or R4 short out. (**Note**: this is not needed when R3 and R4 are in series as shown in the circuit diagram for the final board.)
10. Insert U1, current regulator, and solder into place (*Photo 13*). **Caution**: ESD sensitive. Follow appropriate precautions.

11A. Insert "grid," "cathode," and "plate" wires into octal plug. Leave approximately ¼ to ½″ to allow solder to wick up inside hollow pin during soldering.
For triode no. 1 of a 6SN7 type tube:
Pin 4 = grid of unit no. 1
Pin 5 = plate of unit no. 1
Pin 6 = cathode of unit no. 1
These pins are labeled on the printed circuit board as: G4, A5, and K6, respectively (*Photo 13*).
This octal base (*Photo 14*), available from AES—part no. P-SP-476, is approximately ⅝″ high and provides a simple means to grasp and remove from the octal socket. Since this device does not have a protective housing in place, use suitable precautions to prevent electrical shock.

11B. Solder the lead wires into the octal plug base (*Photo 15*) and then trim flush. Sometimes solder may dribble over onto the outside of the base pin. After cooling down, carefully trim off the excess with an X-Acto knife and burnish/lightly sand or file (jeweler's file) with Scotch pad or similar, to remove any burrs and excess solder so that the pins fit easily into the Tube Tester's socket.

12. Place TT "Gut Checker" circuit board over the "grid," "plate," and "cathode" wires extending up through the base of the octal plug (*Photo 16*). Solder circuit board in place and trim off extra wire. Add heatsink to U1.

PHOTO 10

PHOTO 11

PHOTO 12

PHOTO 13

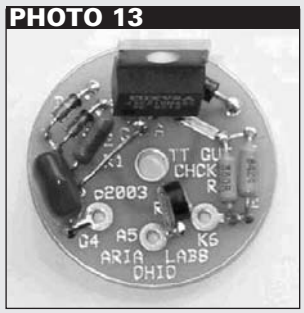

The Transconductance Standard is now ready for use. I recommend that you carefully measure the transconductance across a variety of input voltage levels, up to 5V RMS, and plate to cathode voltages, 50 to 250V DC, to determine the overall relative accuracy. For safety, attach some outer housing over the base plug and backfill with a potting compound to prevent electrical shock. Ensure that the heatsink does not touch the housing.

PHOTO 14

PHOTO 15

PHOTO 16

of trimming them up following soldering to the base's pins.

NOTES ON ASSEMBLY

After submitting the initial draft for this article, I thought it would be more beneficial to show a pictorial assembly guide (*Photos 4–16*). There are a few minor differences in the board contained in this article than shown in photos. The circuit board shown in the photos was one of the prototypes I still had remaining.

First, for the keen-eyed, the board is designed for R3 to be in parallel to R4. Subsequent to prototyping, I found it easier to set the current setpoint resistor by using R3 and R4 in series.

During the prototype stage, I also provided for a resettable fuse to protect against mishaps of faulty tube testers or accidental misuse during operation. I was a little leery after "toasting" two of the current regulator ICs during initial breadboard testing, so I added the fuse as a precaution. Subsequent to prototyping, I decided that this extra precaution wasn't really necessary and probably isn't needed with diode D1 (a high voltage rectifier diode—UF4004) to pro-

tect against reverse voltage transients (from Hickok type testers). I don't think the circuit—once assembled—will have a short of both R3 and R4 at the same time. The probability is extremely low for two resistors in series to both short out at the same time[7], which could cause excess current draw through the 10M45S.

As you can see, I designed this standard for use on RCA or similar tube testers with lower input signal test voltages, and, therefore, R1 is 0Ω (shorting wire). The circuit board used is from the initial prototype run.

I had trouble attaining a clean copy of the printed circuit board layout from ExpressPCB, so I redrafted it using AutoSketch (*Fig. 7*). This drawing is referenced to 1.00″ diameter so the technician/experimenter can adjust the size accordingly if using a copy machine to transfer the layout to a circuit board. I also simplified the layout as well, removing the resettable fuse and converting the entire board to a single layer for easier manufacture using home etching methods.

If you have any questions or comments, please feel free to e-mail me at jhatch200@yahoo.com. *aX*

For this experiment, and some of my other projects, I have found the following vendors to be very good sources of parts and supplies.

1. Angela Instruments (http://www.angela.com).
2. Antique Electronic Supply (http://www.tubesandmore.com).
3. Parts Connexion (http://www.partsconnexion. com).
4. WPI (http://www.wpi-interconnect.com).
5. Mouser (http://www.mouser.com).
6. Digi-Key (http://www.digikey.com).
7. Jameco (http://www.jameco.com).

FIGURE 7: BOARD LAYOUT FOR SINGLE-SIDED BOARD, REV. 2, OCT '03. SCALE OF 1.0″ ADDED TO ENSURE BOARD IS PROPERLY SET UP FOR THOSE USING ART TRANSFER METHODS. (SCALE SIZE DOWN AS NECESSARY VIA ANY PICTURE/IMAGING SOFTWARE.) RESETTABLE FUSE NOT INCLUDED IN CIRCUIT BOARD.

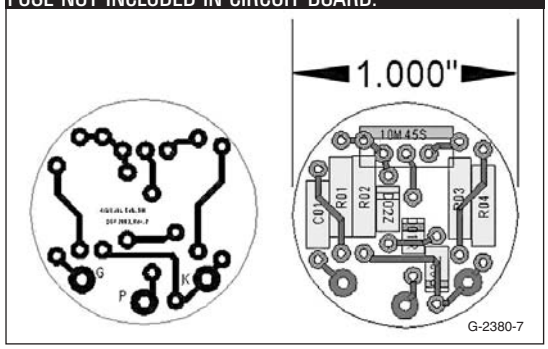

PARTS LIST/RESOURCES:

Mouser No. 5989-250V.1, 0.1µF metal poly capacitor at 250V
Digi-Key No. HS121-ND, TO-220 heatsink (slips on over tab)
Mouser No. 512-1N5242B, 12V Zener diode at 0.5W
Mouser No. 71-RN60D-F-100K, 100kΩ 1% metal film resistor at 0.25W (matched)
Mouser No. 650-TR250-080U, 0.08A resettable fuse (optional for prototype)
Mouser No. 512-UF4004, rectifier diode, 400V at 1A
Mouser No. 71-RN60D-F-243, 243Ω 1% metal film resistor at 0.25W
Mouser No. 71-RN60D-F-40.2, 40.2Ω 1% metal film resistor at 0.25W
Digi-Key No. IXCP10M45S-ND, IXYS 10M45S switchable current regulator at 450V
Digi-Key No. TAH20P75R0J-ND, 75Ω TO-220 power resistor, 75Ω at 20W (optional)
Angela Instruments No. QQQ Octal Pin Plug (similar to WPI or Amphenol)

Note: I could only purchase Octal plugs in quantity from WPI. Subsequent to purchasing these, I found essentially the same octal plug on Angela's website at a very reasonable price and no minimum quantity buy requirement.

The Ultimate Acoustic Analysis System.

For real-time testing of Audio System performance!

- 1/12th Octave Real-Time Analyzer (RTA)
- Energy-Time Graph (ETG) with octave & 1/2 octave band filters
- Sound Pressure Level Meter
- Speaker Distortion Meter (THD+N)
- Signal to Noise Ratio
- Speaker Polarity Test
- Integrated Audio Signal Generator
- Handheld, Portable, Battery Operated
- Serial Data Download and Report Software

Powerful • Portable • Affordable

SENCORE

1-800-736-2673 • sencore.com • e-mail sales@sencore.com

Subscribe To The SENCORE News at www.sencore.com

Replacing the Klipschorn Tweeter

By John Warren

This project, which offers an alternative tweeter configuration for the Klipschorn, Belle, and LaScala loudspeaker systems, requires no modifications to the existing cabinetry.

The Klipschorn has been in production for close to 60 years, and over much of that time it has been offered with the same tweeter—the Electro-Voice Model T35 Super-Sonax with the Avedon Sonophase Throat. Why this particular horn tweeter has survived for so many years is something of a mystery to me. Regardless of the crossover topology, I do not find them particularly pleasing to listen to.

PHOTO 1: ELECTRO-VOICE AVEDON T35. CERAMIC MAGNET MOTOR VERSION IS SHOWN. FANCIER CHROME-PLATED, "VINTAGE" ALNICO VERSIONS EXIST, TOO.

THE ELECTRO-VOICE T35

The EV T35 tweeter (*Photo 1*) is perhaps the most widely recognizable horn tweeter ever to be manufactured in the United States. I purchased this particular unit from MCM Electronics in 1994 for $40, and—other than changes to the motor structure—it is essentially the same tweeter horn designed in 1957 by Robert Avedon for Electro-Voice[1]. The Avedon design was also available in a smaller-magnet, low-cost, model T35B and a considerably more expensive model, the larger-magnet T350[2].

The unit in *Photo 1* has a nominal impedance of 8Ω with a published sensitivity of 104dB/W/m. The steady-state power dissipation capability of the 1″ diameter voice coil is between 5–7W RMS. The 1″ diameter diaphragm is a formed dome made from linen cloth impregnated with phenolic resin.

An anechoic chamber frequency response of a typical 8Ω alnico magnet version of the T35 is shown in *Fig. 1*. The frequency response, estimated to be 3–15kHz (±4.5dB), seems to agree reasonably well with the published response of 3–15kHz (±4dB). The chamber response also gives some information about the tweeter's sensitivity. Between 3–9kHz the unit exhibits an approximate average sensitivity value slightly over 104dB/W/m. The sensitivity then drops to a much lower value of 98dB/W/m at 15kHz.

Interestingly, the response drops off precipitously after 10kHz. For example, the SPL at 12kHz is about 6dB lower than it is at 9kHz. The reduction in acoustic output is associated primarily with the inability of the edge-driven dome to behave as a "linear piston" above 12kHz. The phenomenon is referred to as mass-induced high-frequency rolloff and results in distortion.

The tweeter crossover frequency has historically been 6kHz in the Klipschorn, Belle, and LaScala systems. In the early A-network, a simple first-order

FIGURE 1: ANECHOIC CHAMBER ON-AXIS FREQUENCY RESPONSE OF AN 8Ω ALNICO VERSION OF THE AVEDON T35 SUPER-SONAX. THE RESPONSE WAS MEASURED IN THE ANECHOIC CHAMBER RESEARCH FACILITY LOCATED AT THE CENTRAL INSTITUTE FOR THE DEAF (4560 CLAYTON AVENUE, ST. LOUIS, MO). THE RESPONSE CURVE WAS KINDLY SUPPLIED BY M. HORONZAK (USED WITH PERMISSION).

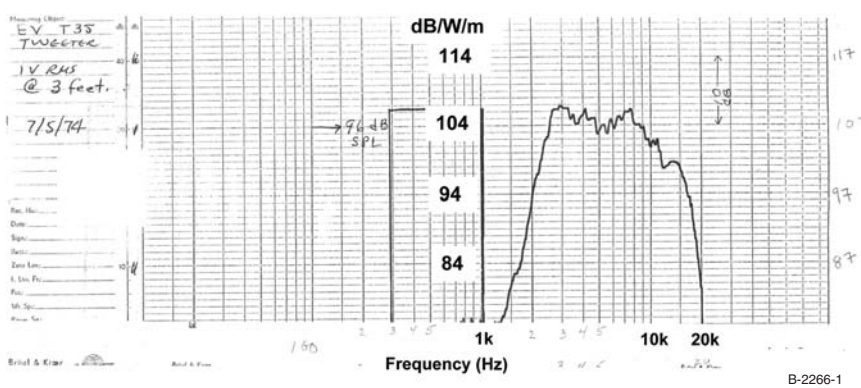

ABOUT THE AUTHOR
John Warren is a senior staff engineer in the rotor structures Materials Engineering Group at GE Aircraft Engines in Lynn, Mass. He has an MS from RPI and a Ph.D. from the University of Virginia, both in materials engineering. He holds six US patents in the area of materials processing. John has been actively involved in speaker building for over 30 years. He can be reached at Lwarren02@comcast.net.

(6dB/octave) high-pass scheme on the tweeter was used. The network was later revised by Klipsch to a third order (18dB/octave) and was designated the AA-network. Factory modifications to the Klipschorn network have continued and are ongoing to this day. The AA has since been replaced by the AK, AK-2, AK-3, and (current) AK-4 series of designs. The crossover frequency has not changed, however.

SELECTING A REPLACEMENT

In selecting a replacement for the T35, my goal was to reduce the distortion heard in the tweeter at the SPL levels I liked listening to. First I surveyed the available horn tweeter designs in an attempt to understand how design tradeoffs between them affect performance. Considering the aesthetic qualities of the replacement I determined at the outset that it would be easier to simply mount the tweeter and its associated filter on top of the Klipschorn rather than attempt a rework of the existing factory cabinetry.

A few of the listening positions in my room, including my chair, are about 6m away from the corners. For an on-axis SPL of 95dB at 6m from a single tweeter, the voice coil must be able to dissipate a minimum of 5W RMS assuming an average sensitivity of 104dB/W/m. Diaphragm excursion, which varies inversely with the square of the frequency above the tweeter's Fs, has a considerable effect on distortion[3]. Distortion

PHOTO 2: THE DIFFERENCES BETWEEN THE JBL 2404H AND THE EV T35 HORNS (VIEW IS FORWARD LOOKING AFT).

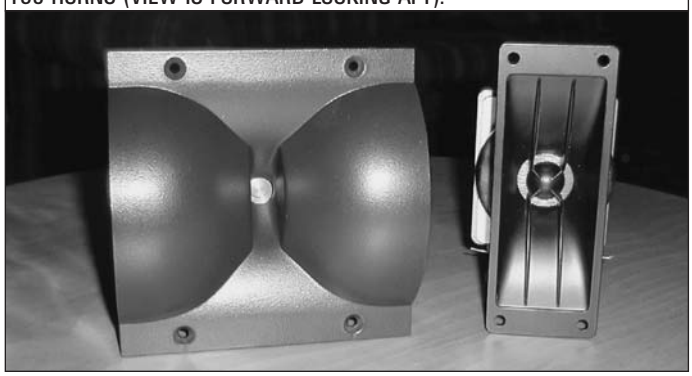

PHOTO 3: DIFFERENCES IN DEPTH BETWEEN THE TWO DRIVERS. THE MOTOR STRUCTURE OF THE JBL (RIGHT-HAND SIDE) TWEETER IS VERY LARGE. A RUBBER-LIKE "MAGNET TIRE" SURROUNDS AND PROTECTS THE MAGNET ON THE JBL TWEETER. MAXIMUM HEAT DISSIPATION IS REALIZED WHEN THE TIRE IS REMOVED.

PARTS CONNEXION

PAYPAL, BIDPAY, MONEY ORDER/BANK DRAFT/CASHIER'S CHECK

YOUR DO-IT-YOURSELF TUBE AUDIO

SUPERSTORE!

No matter what your requirements are, pcX has what you need. Whether it be vacuum tubes (both newly manufactured, NOS or OS), sockets, transformers, caps, resistors, connectors, hook-up wire, etcetera–we've got a world class selection of all the best brands... and more arriving every month!

toll free order line 1-866-681-9602 US & Canada only.

www.partsconneXion.com

Tel: 905-681-9602 Fax: 905-631-5777 info@partsconneXion.com

2885 Sherwood Heights Drive, Unit #72, Oakville, Ontario, CANADA L6J 7H1 • NOTE: No "on-site/walk-in" business at this time.

PHOTO 4: LAYOUT OF THE FOUR ¾″ PLYWOOD PARTS THAT MAKE UP THE TWEETER STAND WITH DIMENSIONS GIVEN IN INCHES. NOTE THAT THE TWEETER HOLE IS POSITIONED TO ACCOMMODATE A BUTT-JOINT AT THE BASE (SEE *PHOTOS 7* AND *8*). YOU CAN FIND A DETAILED DIMENSIONAL DRAWING OF THE JBL 2404H AT WWW.JBLPROSERVICE.COM/PDF/ UNDER THE FOLDER NAMED DISCRETE SALES MODELS.

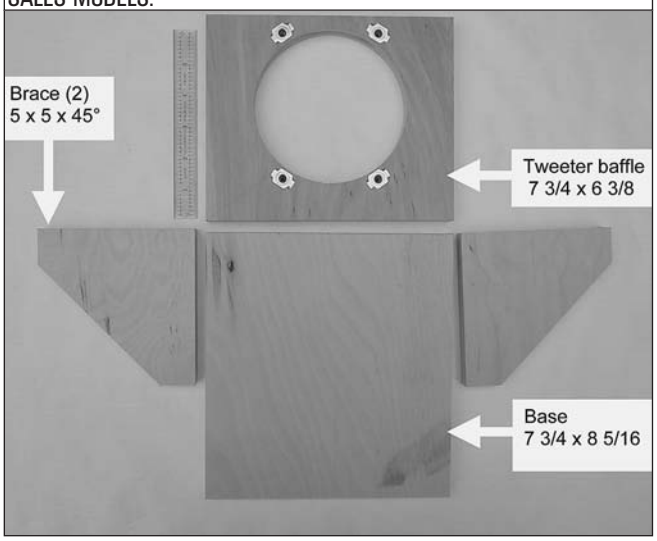

trends with excursion and, in the case of the T35, increases sharply at these power levels. For example, a "bacon-frying" sound becomes apparent when the T35 is driven to the sound pressure levels described. So, from a qualitative perspective, I favored drivers with relatively large radiating surfaces.

Obviously, the candidate tweeter must be horn loaded and exhibit a sensitivity comparable to the T35. Higher sensitivities are permissible, but might require either a resistor L-pad or an attenuation autoformer. The replacement must also have a better frequency response at 10kHz and above.

The crossover frequency of 6kHz and third-order attenuation response of 18dB/octave is sufficient to allow for a wide range of tweeter types to be considered. In fact, the 6kHz crossover frequency is significantly higher than the lowest recommended crossover frequency for a number of good-quality horn tweeters. Since large diaphragm excursions associated with operating in the lower frequency range are avoided, distortion is minimized.

I also factored adequate power-handling capability for occasional listening levels considered unreasonable into the power requirements. Transient SPLs of 105dB at 6m require a tweeter able to dissipate about 40W under short-term conditions given the 104dB/W/m minimum sensitivity requirement. This provides significant margin since most of the power dissipation in a loudspeaker system is concentrated in the bass and low midrange regions of the acoustic spectrum.

METAL CHOICES

Diaphragm materials are numerous and include phenolic-impregnated fabrics and the engineering alloys that possess high specific modulii (the ratio of elastic modulus/density). The metals in this category include aluminum alloys, pure (elemental) titanium, and pure beryllium. The higher the specific modulus, the closer the diaphragm is able to behave as the "perfect" piston. Of the three, beryllium is the clear standout, possessing a significantly higher specific modulus than either titanium or aluminum.

It is ideal for this application, but the pure metal is exceedingly difficult to form using conventional deformation processing methods. Instead, a process called vapor deposition is used to form the diaphragm from a "gas" composed of beryllium atoms. The atoms condense onto shaped tooling and thus take on whatever form the tool is fabricated to (for example, a dome). Beryllium tweeters and the replacement diaphragms are expensive, but if this is a secondary concern, the high-frequency performance is exceptional; an example of this type of horn tweeter is the Pioneer TAD ET-703.

Since titanium and aluminum alloys can be formed from annealed sheet using conventional forming processes, diaphragm costs are much lower. Commercially pure titanium possesses both the strength and fatigue resistance necessary for midrange and high-frequency transducer diaphragm applications. It's nearly twice as dense as aluminum, but its elastic modulus is greater by an even larger factor, so when the specific modulii of the metals are compared, titanium shows a small advantage. Alternatively, aluminum alloys are quite suitable for home audio applications, having been used for many years.

TWEETER TYPES

When examining horn tweeters, I found quite a few options to choose from. For the replacement I considered bullet, slot, and bi-radial configurations. The Klipschorn, by design, must be placed in the corner of the listening room, which suggests that a horn with 90° horizontal dispersion would provide optimum coverage, especially if the units are positioned in corners separated by the longest room dimension as recommended by Paul Klipsch.

Bullet tweeters provide high on-axis sensitivities resulting in narrow, conical dispersion characteristics, useful in sound reinforcement applications where the tweeter is located far away from the listening audience but, perhaps, less desirable for the home audio

PHOTO 5: SETUP USED TO MAKE THE CUTOUT FOR THE TWEETER OPENING. ROUTER IS A MILWAUKEE. BIT IS ¼″ DIAMETER, SINGLE FLUTE CARBIDE.

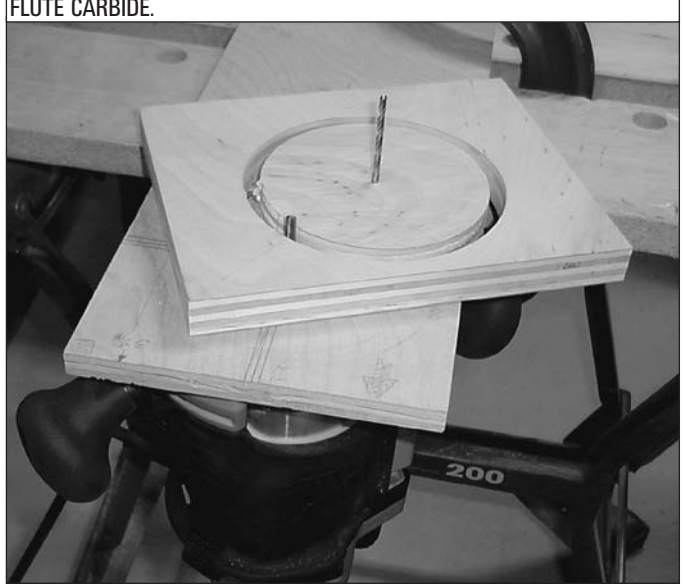

PHOTO 6: PILOT HOLES DRILLED IN BOTTOM OF BASE. THE RUBBER FEET CONTAIN METAL WASHERS THAT ALLOW THE SCREWS TO BE SOCKED DOWN FIRMLY. RUBBER FEET ARE FROM PARTS EXPRESS (PN 260-773). DRILL THE PILOT HOLES BEFORE GLUING THE ASSEMBLY TOGETHER.

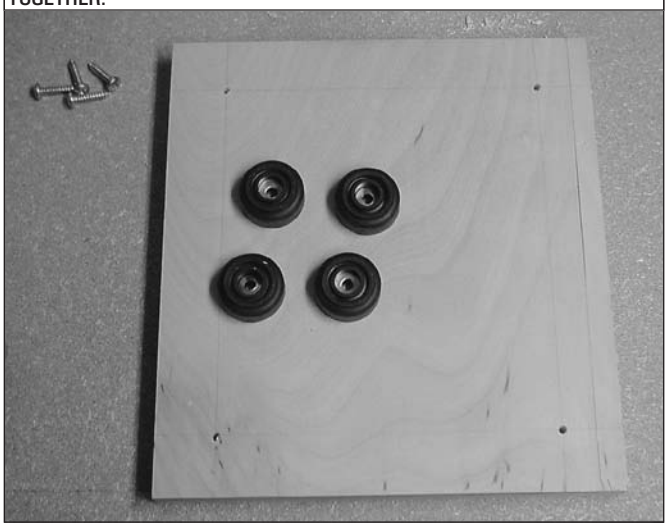

PHOTO 7: FORWARD VIEW SHOWING HOW THE BAFFLE AND BASE BOARDS OF THE TWEETER STAND ARE FIXTURED FOR GLUING.

enthusiast who's trying to achieve good sound reproduction in any number of potential listening positions scattered throughout the room. Examples of bullet-type tweeters include the JBL 2402H and Fostex T500A.

Slot tweeters rely on the principle of diffraction to achieve extremely wide horizontal dispersion characteristics with a corresponding debit in vertical plane dispersion. Given that the tweeter will be placed in the corner, however, wide horizontal dispersion (as high as 140° in some embodiments, for example) is of no real advantage in this application. Examples of slot-type transducers include the JBL 2405H and Beyma CP21F.

Bi-radial horns appear to be quite satisfactory for corner placement, as the dispersion characteristics of the JBL 2404H Bi-radial horn attest. The published specification sheet shows the 2404H to possess 100° horizontal × 100° vertical coverage angles with 1/3 octave polar response plots showing very good horizontal and vertical dispersion characteristics between 3–20kHz[4].

Further examination of the specification sheet shows a sensitivity of

PHOTO 8: AFT VIEW. NOTE THAT BUTT-JOINT IS MADE AGAINST THE AFT FACE OF THE TWEETER BAFFLE. A COUPLE OF DRY ASSEMBLY RUNS ARE NECESSARY TO OBSERVE HOW THE WOOD STRAINS WHEN LOADED BY THE CLAMPS.

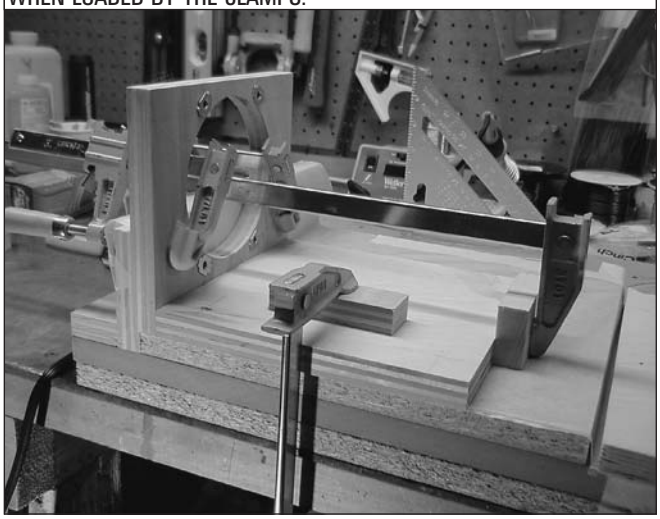

PHOTO 9: FINISHED TWEETER ASSEMBLY, SHOWING HOW NETWORK IS SHOEHORNED INTO STAND. IN THIS PARTICULAR CONFIGURATION, A 1.5DB L-PAD WAS USED. A 10-POSITION CINCH 10-141 TERMINAL BLOCK IS SHOWN SCREWED DOWN TO THE BASE. NETWORK CONNECTIONS TO THE TERMINAL BLOCK ARE FACILITATED BY CINCH Y-141 SOLDER POSTS (CINCH PRODUCTS AVAILABLE FROM DIGI-KEY).

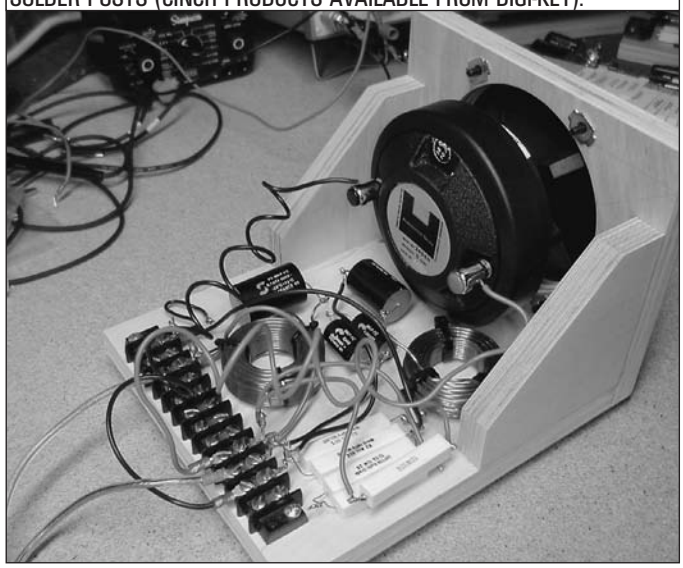

105dB/W/m, a frequency response of 4–19kHz (±3dB), and a continuous power dissipation capability of 40W. Above the crossover frequency of 6kHz, the sensitivity is higher still. The recommended minimum crossover frequency is 3kHz with a 12dB/octave attenuation response, well below the desired 6kHz crossover point necessary for the Klipschorn. The diaphragm is a relatively large 1.75″ diameter annular ring fabricated from an aluminum alloy. Also, as an added bonus, the mounting hardware for the tweeter is included and consists of black oxide machine screws and baffle T-nuts.

TABLE 1

ATTENUATION (DB)	R1 (Ω)	R2 (Ω)
1.0	0.65	49
1.5	1.0	32
2.0	1.2	23
3.0	1.8	14
4.0	2.2	10

FILTER NETWORK

The 2404H is a physically large unit, as you can see in *Photos 2* and *3*. I measured the driver impedance using the test setup described by Pierce[5]. The impedance of the raw driver is shown in *Fig. 2* and is labeled "2404H." At the desired crossover frequency of 6kHz the impedance is about 8.5Ω with a large impedance peak in the vicinity of 4.3kHz. Also shown in the same graph is a curve labeled "2404H + LCR," which is the resultant impedance of the driver with a series notch filter in parallel with it and tuned to 4.3kHz (C = 7μF, L = 200μH, R = 10Ω).

With the notch filter in place, the measured impedance ranged between 5 and 6Ω over 2–10kHz. As expected, attenuation of the signal at and above 6kHz was realized due to the effect of the notch filter. For example, listening to the tweeter on-axis at 6kHz while switching the notch filter "in and out" revealed some attenuation of the signal when the filter was active. I did not consider the attenuation significant, however, since the output at 6kHz of the 2404H with the notch filter had essentially the same loudness as the raw T35.

With the notch filter in place and doing its job, I calculated the component values for a third-order, 6kHz Butterworth network terminated into a 6Ω load. The complete network schematic is shown in *Fig. 3*. The resistor L-pad (should you find one necessary) is inserted between the notch filter and the Butterworth (for resistor values and corresponding attenuation ratings, see *Table 1*). The measured impedance of the driver with LCR filter and 6kHz,

FIGURE 2: IMPEDANCE PLOTS OF THE 2404H, 2404H WITH LCR FILTER IN PARALLEL WITH DRIVER, AND THE 2404H WITH THIRD-ORDER BUTTERWORTH FILTER. THE IMPEDANCE VALUES WERE MEASURED USING A CALIBRATED VOLTAGE DIVIDER WITH THE DRIVER SUSPENDED SUCH THAT A DISTANCE OF 3′ FROM ANY SURFACE WAS REALIZED.

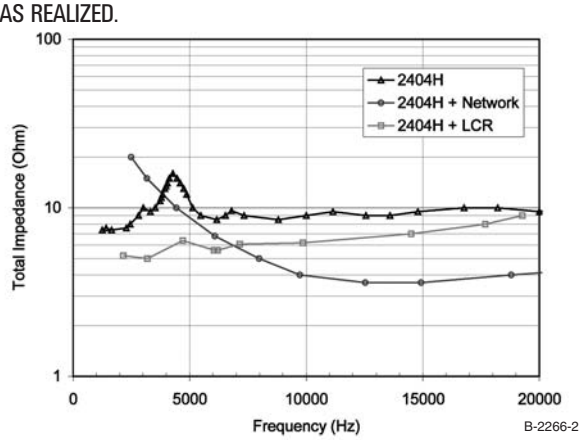

FIGURE 3: SCHEMATIC OF THE TWEETER NETWORK. 16 AWG STRANDED HOOKUP WIRE IS SUITABLE FOR ALL OF THE CONNECTIONS.

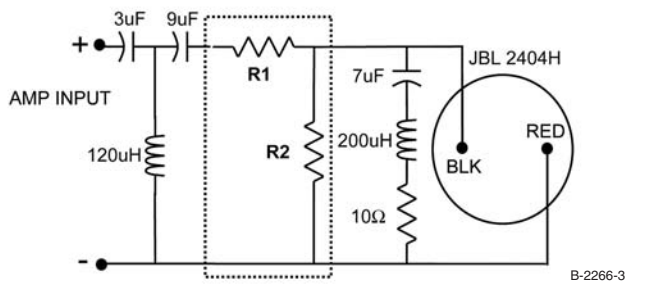

third-order Butterworth network is shown in *Fig. 2*. The curve is labeled "2404H + Network."

For the prototypes, I used 14AWG air-core inductors and Solen metallized polypropylene capacitors. Resistors were non-inductive, sand-cast types with 20W RMS power ratings. The supplier was Madisound.

MAKING THE TWEETER ASSEMBLY

With the tweeter and crossover taken care of, the last part of the project is to construct a small housing (a "stand") for placement on top of the speaker system. To take advantage of the dispersion characteristics of the bi-radial horn, I made the tweeter mounting baffle as small as was practical, assuming that the unmounted driver is the ideal mounting configuration. I made the base of the stand deep enough to contain the associated network and terminal block.

I fabricated the tweeter stand prototype from ¾″ thick plywood, using a table saw, router, and a bench top drill press (*Photo 4*). The baffle cutout for the tweeter is a 122mm diameter hole cut using the setup shown in *Photo 5*. The trickiest part of the woodworking is mounting the T-nuts so that they align precisely with the bolt holes on the tweeter mounting flange. When done properly the mounting screws will pass through the tweeter mounting flange and screw down without binding.

Once you have cut all of the parts and pressed in the T-nuts, drill the four pilot holes that will be used to screw the mounting feet down onto the bottom of the base plate (*Photo 6*). Assembly is straightforward but requires a few basic tools which most builders have.

To glue the baffle to the stand, I fabricated a simple right-angle fixture from scrap pieces of MDF and plywood (*Photos 7* and *8*). A sheet of wax paper keeps the assembly from sticking to the fixture. Also, an assortment of clamps similar to the ones shown are very useful to have handy. The finished prototype tweeter stand with all of the components mounted is shown in *Photos 9*, *10*, and *11*.

HOOKUP

Hooking up the new tweeter to the Klipschorn requires that the tweeter filter section in the existing factory network be deactivated. If you have the AK, AK-2, or AK-3, it is relatively straightforward. For illustration purposes, I've included a schematic of the AK-2 network (*Fig. 4*). The tweeter filters in the AK and AK-3 are identical to the AK-2.

Referring to *Fig. 4*, one of the 2µF series caps has a lead that connects directly to the positive amp input terminal block. At the capacitor, unsolder the wire from the capacitor lead to the terminal block connection. Then, at the 125µH inductor, unsolder the connection of the inductor leg that connects to ground. By performing these two steps, the ladder section of the stock tweeter circuit is cut completely from the amp input.

On the A and AA-networks, disconnect the leg of the 2µF capacitor connected to tap #5 on the midrange attenuation autoformer, which is labeled T2A. Again, the best way to do this is to unsolder the connection at the 2µF cap. The AA has a 245µH inductor in parallel with the tweeter with one leg back to ground (the A has no inductor). Unsol-

Lundahl Transformers in the U.S.

K&K Audio is now selling the **premier European audio transformers** in the U.S.

***New* Lundahl Products**

- Amorphous core tube power output transformers – SE or PP
- Special SE 845 output transformer
- Compact high inductance power supply chokes
- Tube line output transformer

High-End Audio Kits

- RAKK DAC 24bit/192kHz D/A Converter w/ tube output stage
- MM/MC Phono Preamplifier
- MC Phono Step-up Unit
- Differential Line Stage Preamplifier
- Minimal Reactance Power Supply
- Tube Microphone Preamplifier

For more information on our products and services please contact us at:

www.kandkaudio.com

info@kandkaudio.com voice/fax 919 387-0911

Test Equipment Depot

800.996.3837

The source for premium electronic testing equipment

New & Pre-Owned

- Oscilloscopes
- Power Supplies
- Spectrum Analyzers
- Signal Generators
- Digital Multimeters
- Network Analyzers
- Function Generators
- Impedance Analyzers
- Frequency Counters
- Audio Analyzers

Call now to speak to one of our knowledgable salespeople or browse our extensive online catalog

www.testequipmentdepot.com

• Sales • Repair & Calibration • Rental • Leases • Buy Surplus

der this leg at the inductor.

Figure 5 shows the AA schematic and where the breaks are made. Finally, run a pair of leads from amp input to the input of the new tweeter filter.

Place the 2404H tweeter assembly on top of the Klipschorn cabinet with the tweeter baffle flush with the top-section grille. Run a line of 16 AWG lamp cord from the amp inputs located on the factory network, to the amp inputs on the 2404H tweeter assembly terminal block and make the appropriate connections. To simplify making the connection, crimp #6 (22-16 AWG) insulated fork terminals to the wire ends.

FIRST IMPRESSIONS

The improvement over the T35 is by no means subtle, it is decidedly obvious.

REFERENCES

1. US Patent # 2,873,812 (see www.uspto.gov).
2. Specifications and Instructions Models T35B, T35, and T350 (P/N 53517), Electro-Voice, Inc.
3. Excursion-Limited SPL Nomographs, S. Linkwitz, *Speaker Builder*, 4/84, pp. 24 27.
4. 2404H Product Specification Sheet (see www. jblpro.com).
5. "The Impedometer," D. Pierce, *Speaker Builder*, 8/99 pp. 28 31.

PHOTO 10: TO GIVE SOME IDEA OF THE ACTUAL SIZE OF THE TWEETER ASSEMBLY, A 15″ UNIVERSITY C15W LOW FREQUENCY DRIVER IS SHOWN NEXT TO IT.

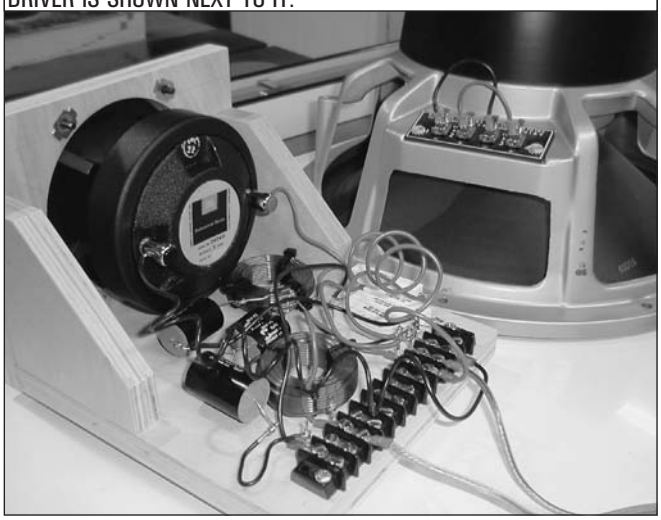

PHOTO 11: FRONT VIEW OF 2404H TWEETER ASSEMBLY NEXT TO 15″ UNIVERSITY C15W LOW-FREQUENCY DRIVER.

Speaker Building 201

A Comprehensive Course in Speaker Design

by Ray Alden

With 11 completely designed speaker systems including a 5.1 home theater system

NEW!

- Your guide to understanding the mysteries of speakers
- A perfect mix of theory and practical application

Build Your Own FIRST-RATE System

For Beginners and Serious Enthusiasts

NOW YOU CAN BECOME A SPEAKER BUILDER

With Speaker Building 201

Whether you're a beginner eager to get into speaker building, an intermediate builder who wants to improve his skills, or a speaker building fanatic who's looking for projects to build, author Ray Alden has written this book for you!

You don't need an elaborate workshop, expensive analytical equipment, or sophisticated software. Alden walks you through the steps to design and construct a first-rate system—one that surpasses higher-cost commercial products.

Features 11 proven projects to build, many of which have been tested by loudspeaker expert, Joseph D'Appolito. 2004, 8½" × 11", softbound, ISBN 1-882580-45-1. Sh. wt: 2 lbs.
BKAA66.....$34.95

To order call 1-888-924-9465
or order on-line at www.audioXpress.com

Old Colony Sound Laboratory, PO Box 876, Peterborough, NH 03458-0876
Toll-free: 888-924-9465 Phone: 603-924-9464 Fax: 603-924-9467
E-mail: custserv@audioXpress.com www.audioXpress.com

High frequencies are reproduced with extreme clarity and detail. The assumed excellent dispersion characteristics of the bi-radial horn configuration are confirmed too, evidenced by a complete lack of "beaming."

SUMMARY

As Mr. Dell himself so eloquently stated, "the long history of the EV T35 is a case of reluctant accommodation," and empirical evidence to support this observation is found in the numerous factory modifications to the tweeter filter section of the network. These were all designed and released to "reluctantly accommodate" the limited power and frequency response capability of the EV T35.

Good horn tweeters are expensive, and the JBL 2404H is no exception. A new pair will set you back about $550. The network components used will cost an additional $40. A better grade of components, of course, will cost more, but, in my opinion, the investment is entirely worthwhile. *aX*

FIGURE 4: SCHEMATIC OF THE AK-2 CROSSOVER USED IN THE KLIPSCHORN. THE AK AND AK-3 TWEETER FILTER SECTIONS ARE IDENTICAL. LARGE XS MARK LOCATIONS WHERE CIRCUIT BREAKS ARE MADE.

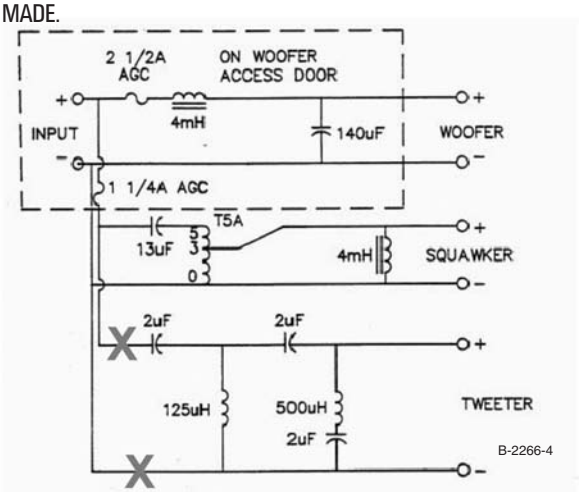

FIGURE 5: SCHEMATIC OF THE AA CROSSOVER USED IN EARLIER KLIPSCHORNS. LARGE XS MARK LOCATIONS WHERE CIRCUIT BREAKS ARE MADE.

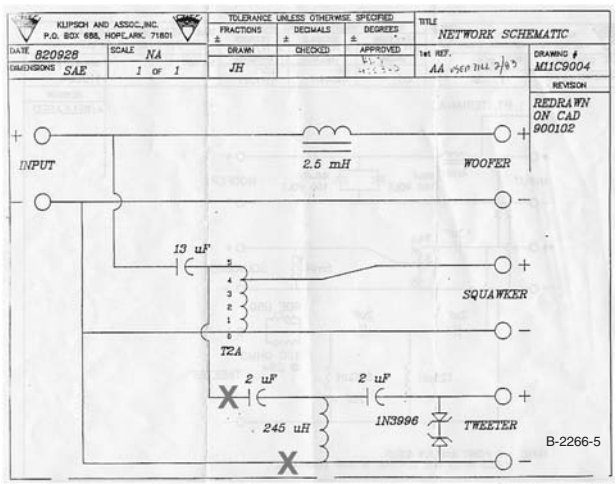

DOES YOUR COPY OF THE *LOUDSPEAKER DESIGN COOKBOOK* LOOK LIKE THIS?

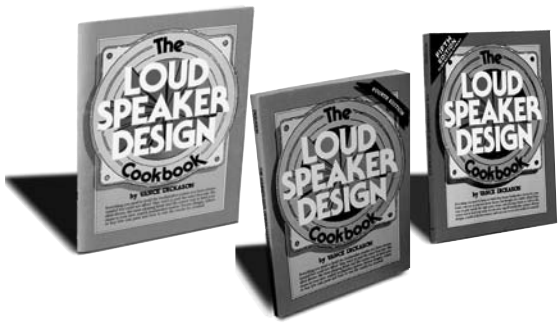

If it does,
you're missing out on a lot!

Call 888-924-9465 to order your 6th edition or order on-line at www.audioXpress.com!

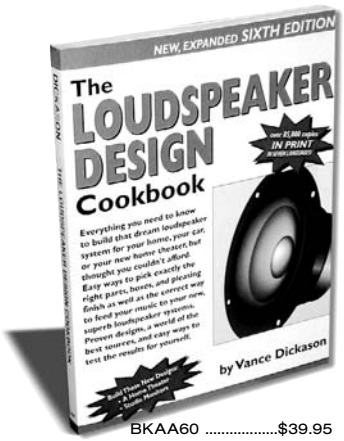

BKAA60 .....$39.95

- Expanded coverage, references, and graphs in all chapters
- A completely new chapter on transmission line speakers
- A tutorial on low-frequency woofer design
- Two projects to build—a home theater system and a studio monitor

So, act now and upgrade to the most current, comprehensive, and informative *Loudspeaker Design Cookbook* today!

Old Colony Sound Laboratory, PO Box 876, Peterborough, NH 03458-0876 USA
Toll-free: 888-924-9465 Phone: 603-924-9464 Fax: 603-924-9467
E-mail: custserv@audioXpress.com www.audioXpress.com

A Shock Hazard Tester

By Charles Hansen

This article describes a Shock Hazard Tester, which might be of significant interest to those of you who restore older audio equipment. Parts cost except for the enclosure is about $25.

From the end of World War II until the '60s when transistor radios became popular, low-cost AM radios had no power transformer. The five tubes had series-connected filaments whose total voltage allowed the radio to be operated directly off the AC line voltage. A typical tube lineup consisted of 12BE6, 12BA6, 12AV6, 35W4, and 50C5, for a total of 121V. Some areas of the country still had DC line power so the sets were known as AC/DC radios. One side of the line cord was connected directly to the chassis. Since there were no polarized plugs or outlets in use back then, there was a 50/50 chance that the hot side of the AC line was connected to the chassis.

The radio user was "protected" from a possible fatal shock by the plastic radio case and knobs, fiber sleeves on the control shafts, and a fiber rear panel. However, if you came in contact with the chassis or any of the metal parts or hardware, you could be electrocuted. The fuse for the outlet would not open because the fatal current flow through the human body is too low. You could sometimes determine the proper plug polarity by the slightly higher hum level when the chassis was not connected to AC line neutral. Those with DC line power were a bit more fortunate—the filaments would light up if the plug was backwards, but the set wouldn't work since the rectifier tube blocked the reversed plate voltage.

Eventually, consumer safety became an issue, and polarized plugs and three-wire outlets became the norm. With the switch to solid-state, consumer audio equipment needed power transformers to derive the lower internal voltages. The transformer provided an effective isolation barrier between the user and the AC line.

Three-wire power cords connect the line and neutral to the transformer primary, and the chassis to ground. The ground wire provides a low resistance path to "earth" that is independent of the two AC line current conductors in the equipment. Since the ground wire is attached directly to the metal enclosure, it holds the chassis voltage at ground potential. Should the hot side of the power cord come in contact with the chassis, the line fuse or breaker will open and provide protection against shock.

PHOTO 1: PROTOTYPE TESTER, FRONT VIEW.

One problem is that the safety ground wire can be defeated if you use a non-polarized ground lifter plug adapter ("cheater" plug) to connect the equipment to an older two-prong outlet. The equipment will operate normally without the ground wire because it is not a part of the conducting path that supplies the electricity. If the ground wire is broken or removed, you usually will not be able to tell the difference. If line voltage comes in contact with the chassis because of a frayed cord or an insulation breakdown, there may be a shock hazard.

In addition, a lot of equipment today uses a two-wire polarized power cord. The chassis is left floating with respect to the AC line, or may be referenced to the AC neutral through a resistor or RC network. A latent insulation failure can place AC line voltage on the chassis. In the worst-case scenario, the person operating the equipment may become the only current path to ground. If the AC outlet has been miswired, a similar shock hazard can exist. If you suspect any problems, you should test the outlet for your audio equipment with an outlet tester. Radio Shack sells an inexpensive AC outlet tester (22–141) that includes a ground fault interrupt (GFI) test feature.

LEAKAGE CURRENT LIMITS

Consumer equipment and appliances must be tested for earth (ground) leakage current and touch current. UL and IEC specs in the US, and similar specifications in other countries govern the standards for the current levels. Most manufacturers design their equipment to meet the global market requirements.

The earth leakage current procedure measures the current from each of the AC mains phase conductors (line and neutral) to an accessible chassis connection on the unit under test (UUT) with the ground disconnected. The newer touch current procedure measures current in the earth conductor from the supply side to the UUT. Mea-

FIGURE 1: HUMAN BODY IMPEDANCE MODEL.

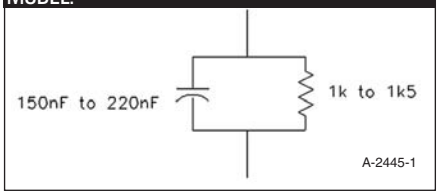

surements are made using all possible combinations of the AC mains polarity, and open and short circuit conditions of the earth conductor.

Extensive tests have established an approximation of the human body impedance. Most of the body impedance is skin resistance. The skin resistance is reduced when wet, so hand-held appliances or those that may come in contact with moisture have a lower touch current limit. The perception of shock is proportional to frequency, so the limits are also lower for equipment that may normally have RF leakage. Medical equipment must meet even more stringent limits since patients may have wounds that greatly reduce the body impedance.

Leakage and touch current limits are designed to both minimize the risk of shock, and limit the involuntary reaction of the user that may cause physical injury. A human being can respond to a current as low as 0.5mA (500μA), so it is not much consolation to someone who gets mildly shocked, if the shock produces a muscular reaction that then causes them to fall from a ladder.

CONSUMER EQUIPMENT SAFETY MEASUREMENTS

In order to detect gross failures, resistance measurements are first made from the power conductors to the unit chassis. Next, the standardized "body impedance model" network (*Fig. 1*) is connected to the metal enclosure. Equipment makers measure the leakage currents that flow from the AC mains conductors in all possible combinations, to the chassis and through the body impedance model network (and potentially through the user) to ground. Equipment that has a three-wire power cord must not produce any leakage or touch currents beyond 0.25mA. For products with polarized two-wire power cords, the current must not exceed 0.50mA.

Ground bonds for three-wire equipment are subject to a ground bond test,

FIGURE 2: SHOCK HAZARD TESTER SCHEMATIC.

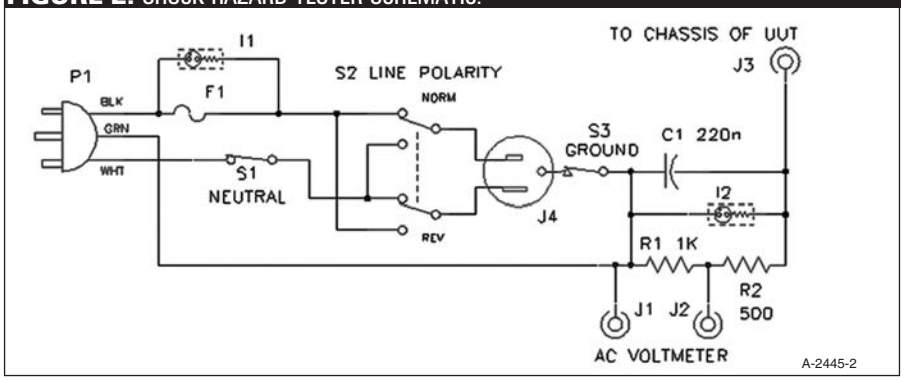

TABLE 1

Parts List

SYMBOL	VALUE	DESCRIPTION	VENDOR	PART NO.
C1	220nF 275V AC	polypropylene	Mouser	75-F1778422M2FCB0
F1	see text	3AG fuse, slow blow	R-S	
I1		neon lamp, amber	Mouser	607—6010M3
I2		neon lamp, red	Mouser	607—6010M1
J1		binding post, black	Mouser	164—4201
J2		binding post, white	Mouser	164—4206
J3		binding post, green	Mouser	164—4204
J4		AC outlet, 15A 125V single		
P1		AC power cord, 3-wire		
R1	1k 15W	wire wound	Mouser	280-CR15—1.0k
R2	500 10W	wire wound	Mouser	280-CR10—500k
S1	SPST	SPST 6A 125V toggle	Mouser	10TC220
S2	DPDT, CO	DPDT 6A 125V toggle	Mouser	10TC265
S3	SPDT, MOM	SPST MOM 6A 125V toggle	Mouser	10TC232

Other items: project enclosure, hookup wire, solder, hardware, and so on.

Toroids for Audio

Tube Output
Toroidal transformers for tube output applications. Plus related products.
Standard Series (push-pull)
Single-ended
Specialist Range
Special Designs
Power Transformers
Chokes
Chassis for Tube Amplifiers
PCB for 70W & 100W Amps
Book by Vanderveen

Electrostatic
Step-up toroidal transformers for Electrostatic loudspeaker applications.

Solid State Power
Low noise, low inrush 500 to 2000VA fully encapsulated power transformers.

Standard Power
A broad range of high quality, approved, toroidal transformers. Designed for general purpose applications. From 15 to 1500VA.

PLITRON
MANUFACTURING INC
8-601 Magnetic Drive
Toronto, ON M3J 3J2
Canada
416-667-9914
FAX 667-8928
1-800-PLITRON
(1-800-754-8766)

www.plitron.com

where a specified AC current is injected from the power cord ground to the chassis. The ground bond tester measures the resulting voltage drop to ensure the total resistance does not exceed 0.1Ω.

Insulation resistance tests are performed between the AC mains connections and the chassis at 500V DC with a meter that measures the resistance in megohms. The standard for consumer electronics equipment is 5MΩ minimum.

High-potential (hi-pot) testing may also be required on a lot sample basis, at 1250V AC. This is designed to prove that dielectric failure will not occur due to power line spikes and surges due to lightning transients. Following the hi-pot test, another insulation resistance test is used to verify that there was no insulation damage during hi-pot.

HOW IT WORKS

The schematic diagram for the shock hazard tester power supply is shown in *Fig. 2*, and the parts list is in *Table 1*. The UUT is plugged into J4. Fuse 1 is sized to be 7.5A or less, since in case of a fault you want the fuse to open rather than your household circuit breaker. Even a large power amplifier should draw less than 5A at no load (excluding those power hungry Class-A designs, of course). The optional neon indicator (I1 with integral 220k resistor) lights if the fuse opens.

C1, R1, and R2 comprise the human body impedance network. J1 and J2 are placed across R1 and allow an AC voltmeter to directly read the equivalent leakage mA. Best accuracy is achieved if the voltmeter reads true RMS. J3 connects the human body impedance network to the metal chassis of the UUT. The impedance of C1 is about 12k at 60Hz, which introduces a small error in the leakage current measured across R1.

However, the current through C1 leads that of the R1 and R2. At 120V AC, C1 conducts 9.95mA and R1 + R2 conduct 80mA. The total current is 80.6mA due to vector addition, so the error measurement is less than 1%. Neon indicator I2 will light if the chassis voltage exceeds 70V AC or so, indicating a very hazardous leakage current condition.

AC mains power from power cord plug P1 is connected to AC outlet J4 through line polarity switch S2, which allows you to reverse the hot and neutral AC line connections. It also opens the power in the center-off position. S1 allows you to open the neutral side of the line cord.

The ground connection of J4 is returned through S3 to the ground wire of P1. S3 allows the AC mains safety ground connection to be opened during leakage current measurements. S3 is a momentary switch so the safety ground cannot be inadvertently left open.

CONSTRUCTION

You can build the tester into any metal enclosure, even a dual electrical workbox. You can also purchase the power cord and single AC outlet at your local home improvement center. The remaining parts are listed in *Table 1*. Layout is not critical.

If you use a dual workbox, you can use a standard single outlet wall plate. A blank wall plate on the second section would make a good place to mount the switches. You can mount the jacks on the side of the workbox. The power cord can come through one of the knockouts and be held in place with a cable clamp. The box should be deep enough to house the human body network components.

My prototype is shown in *Photos 1* and *2*. It does not have the two optional neon indicators. I used a 1 ⅜″ chassis punch to make the hole for the single AC outlet. The three switches are mounted on the front, and the three jacks and the outlet are mounted on the rear. I used an IEC style power cord and put the IEC receptacle on the side of the chassis.

PHOTO 2: PROTOTYPE TESTER, BACK VIEW.

USING THE SHOCK HAZARD TESTER

Ground bond, insulation resistance, and hi-pot testing are beyond the scope of this simple tester. It is limited to leakage and touch current testing.

First, with the equipment power cord disconnected from the AC mains, measure from the hot and neutral plug spades to the UUT chassis. This should yield a very high resistance. Next, if the power cord has a third wire connection to the chassis, verify a very low resistance (less than 0.1Ω using a Kelvin measurement) between the ground prong of the plug and the chassis. If you use a DMM, you must subtract the residual resistance of the test leads from the measurement.

For home-built or extensively restored audio equipment, Gary Galo[1] suggests measuring the voltage between the chassis and the AC mains ground, and connecting the power cord to the power transformer primary in the orientation that yields the lowest AC potential between chassis and AC line ground. For units with three wire power cords, this requires temporarily lifting the ground (green) lead with a non-polarized ground lifter plug adapter. This will minimize hum and maximize safety.

Make sure the UUT chassis is isolated from any possible AC mains ground contact (cables to other equipment, a metal stand, and so on). Make sure you do not come in direct contact with the metal chassis during testing. Use an AC outlet for power whose integrity has been checked with the outlet tester previously mentioned.

Preset the shock hazard tester switch-

SOURCES

Mouser Electronics
958 N. Main
Mansfield, TX 76063-4827
1-800-346-6873
www.mouser.com

Radio Shack, local store

REFERENCE

1. Adcom's GFP-565 Preamplifier, Part 1, *audioXpress*, Nov. 2003, p. 17.

es to their normal (down) positions: S1 NORMAL (neutral closed), S2 POLARITY NORMAL, S3 NORMAL (ground closed). Connect an AC voltmeter to J1 and J2. Connect a wire (stranded AWG-14) from J3 to the chassis of the UUT. It must contact bare metal. Good locations are chassis screws or the turntable ground connection on a preamp.

Next, plug the UUT into the shock hazard tester outlet with its power switch ON. Plug the tester into the pretested AC outlet. The leakage current should be zero, because any leakage current at this point will be flowing through the UUT ground.

1. Hold S3 in the momentary GROUND OPEN position. If there is any leakage current, it will be displayed on the voltmeter as mA (1V across 1k resistor R1 will equal 1mA). This leakage should not exceed 0.5mA (equivalent to 0.5V AC on the meter) for a two-wire power cord or 0.25mA for a 3-wire power cord.
2. Release ground switch S3, and place S1 neutral switch in the OPEN position. Momentarily open S3 ground switch to repeat the above leakage measurement. The leakage limit is again 0.5mA or 0.25mA.
3. Release ground switch S3 and, with S1 still in the OPEN position, place S2 polarity switch in the POLARITY REVERSE position. Momentarily open S3 ground switch and repeat the leakage measurement. The leakage limit is again 0.5mA or 0.25mA.
4. Release ground switch S3 and place S1 in the NORMAL position. Leave S2 polarity switch in the POLARITY REVERSE position. Momentarily open S3 ground switch and repeat the leakage measurement. The leakage limit is again 0.5mA or 0.25mA.
5. Restore all switches to their normal positions and unplug the tester from the AC line. Unplug the UUT and turn its power switch off. Remove the chassis connection at J3. If you find any excessive leakage, you should make an internal inspection of the UUT and determine where the insulation breakdown has occurred, and make repairs. After repair, repeat the leakage current testing, and do not put the unit in service until it has passed all the leakage tests. *aX*

FREE SAMPLE

IF YOU BUY,
SELL, OR COLLECT
OLD RADIOS, YOU NEED...

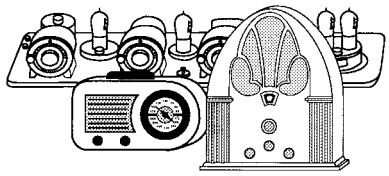

ANTIQUE RADIO CLASSIFIED

Antique Radio's Largest Monthly Magazine
100 Page Issues!
Classifieds - Ads for Parts & Services - Articles
Auction Prices - Meet & Flea Market Info. Also: Early TV, Art Deco, Audio, Ham Equip., Books, Telegraph, 40's & 50's Radios & More...
Free 20-word ad each month for subscribers.
Subscriptions: $19.95 for 6-month trial.
$39.49 for 1 year ($57.95 for 1st Class Mail).
Call or write for foreign rates.

Collector's Price Guide books by Bunis:
Antique Radios, 4th Ed. *8500 prices, 400 color photos* $18.95
Transistor Radios, 2nd Ed. *2900 prices, 375 color photos* $16.95
Payment required with order. Add $3.00 per book order for shipping. In Mass. add 5% tax.

A.R.C., P.O. Box 802-A16, Carlisle, MA 01741
Phone: (978) 371-0512 — Fax: (978) 371-7129
Web: www.antiqueradio.com — E-mail: ARC@antiqueradio.com

• **POLYSTYRENE** CAPACITORS ARE BACK •
PERMANENT SOURCE, EXCLUSIVE, FULL LINE

MULTICAP & AUDIOCAP
the very finest

from FINCH & MARSH

JEAN SMITH, AGENT • TEL & FAX: 415-924-6090
FINCH & MARSH • WWW.CAPACITORS.COM

Polystyrene has the lowest dielectric absorption, holding & releasing the music-signal energy more completely than any other capacitor film in audio & video - including oil & Teflon. Polystyrene capacitors hold their capacitance and excellent performance for years. Reliable Capacitors has developed a proprietary source for this film, and after six months of performance testing, FINCH & MARSH once more offers Rel's full line of polystyrene caps to the audio & video communities.

Transformers

By George David

Audio enthusiasts will value the fundamentals discussed here in this examination of transformer types.

Transformers! Wow, what an enigmatic item they have become. Ignorance of how this chunk of iron works seems to be rather widespread, as evidenced by some recent events.

A short time ago, I read an article about building a single-ended 2A3 amp. The builder said he had a transformer that was 8Ω on the secondary and 5kΩ on the primary. So in order to present the recommended 2500Ω to the 2A3, he said he would use just one-half of the primary. The 2A3 does like a 2500 load, but he will have 1250 if he uses only one-half of the primary.

Then along came this article in *audioXpress* by Peter Buddee ("Audio Uses of Transformers," May '03, p. 50). I am activated! I will offer some observations about item numbers 7, 8, and 9 that he mentions.

OUTPUT TRANSFORMERS

While I think everyone would like to avoid that evil black chunk of iron, it's best to learn some facts about this mysterious heavyweight by reviewing some of the laws and rules of inductance and iron-cored transformers.

1. Transformers only work with alternating current.
2. Their inductance varies as the square of the number of turns of wire wound on the iron core; i.e., if you cut the number of turns in half, you reduce the inductance to one-fourth of what it was.
3. You determine the impedance ratio of a transformer by squaring the turns ratio of the primary to the secondary, or the reverse in order to get a whole number and not a fraction.

Now you are going to say, "I don't know anything about the number of turns on the transformer, what else can I do?" Well, for iron-cored inductors, the turns ratio is the same as the voltage ratio of the two windings involved. Use your ohmmeter to determine which winding has the highest DC resistance.

Get out your AC voltmeter and a source of AC voltage, such as a Variac® or another transformer with about 50V out. Put this AC voltage on the highest resistance winding. Measure the input voltage and the voltage across one other winding on the transformer. Perform division of the voltages in order to get a whole number and not a fraction. Square this number and you have the impedance ratio of the transformer for the windings involved in this measurement.

Now this transformer is not so much of a mystery. Suppose when you had 50V on the high resistance winding, you had 3V on the other winding. Fifty divided by three = 16.666. If you square 16.666, you have 277.76, which is the impedance ratio of this unit using only these two windings. The impedance ratio will be different if you use other windings.

If you want to put an 8Ω speaker on this smaller winding, consider a 2222.1Ω (277.76 × 8) impedance to a load. If I put a 4Ω speaker on the smaller winding, I will only present 1111Ω to the load.

Note how much the primary impedance changes when you go from 8Ω to 4Ω. Many people indiscriminately hook up various speakers with different impedances on their amplifiers and expect them to perform equally well.

For another example, I have a transformer with a 10kΩ primary. The secondary is 4, 8, and 16Ω. Using the 16Ω winding, I divide 10,000 by 16 and get 625. This is the impedance ratio of this transformer using only the 16Ω secondary winding. If I put an 8Ω speaker on the 16Ω winding, the primary will look like 625 × 8, or 5kΩ.

Now, how much power will a transformer handle? Tough question. I generally figure 3 lbs = 25W, 6 lbs = 50W. This is not always a good guide, as some primaries are limited in that they will only carry so much current.

If you have two transformers with

FIGURE 1: FULL-WAVE CHOKE INPUT.

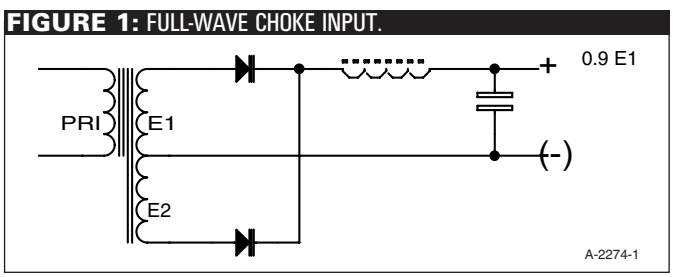

FIGURE 2: FULL-WAVE CAPACITOR INPUT.

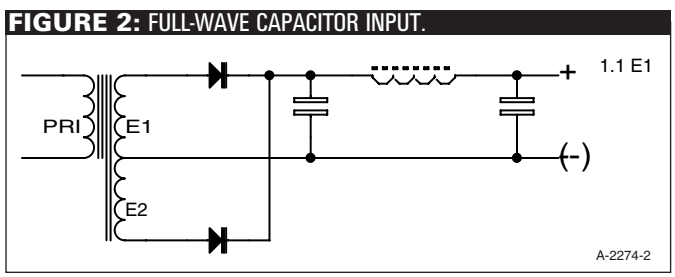

FIGURE 3: FULL-WAVE BRIDGE. C = .01µF R = 500,000Ω

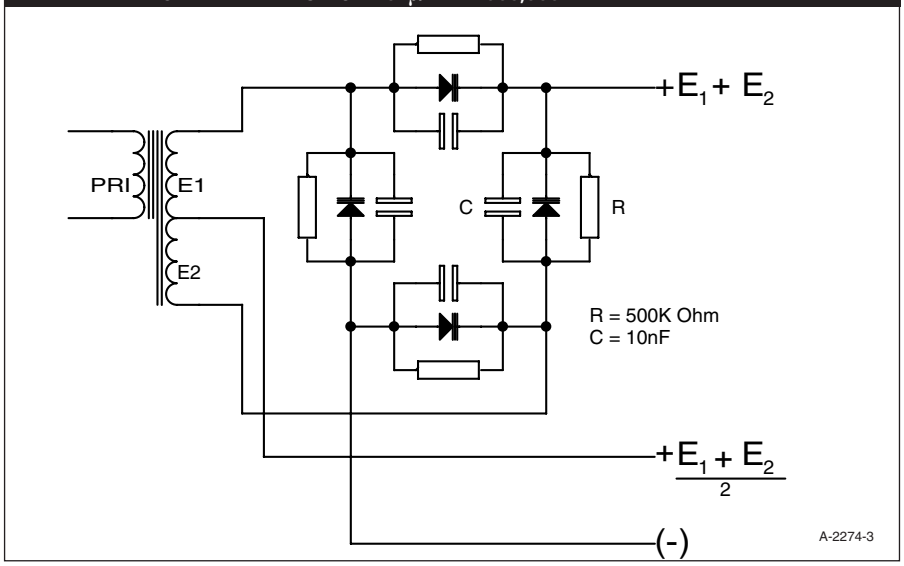

the same specifications, and one has a larger iron core, by all means use the one with the larger core. It will be less likely to saturate from the DC going through. It will also have a better frequency response.

Here is an interesting fact: an ordinary 6.3V filament transformer has a voltage ratio of 19.75. Square this and you have 389.7, the impedance ratio of this transformer. Put an 8Ω speaker on the secondary, and the primary will look like 3117Ω. You might use this on a single-ended 2A3 and the low frequencies will sound good. The highs won't be too good.

If you are a single-ended fan, there is another consideration to look at. A transformer that has linear taps can provide some more options.

Let's say the linear tap is a 40% one. This means that the transformer has a tap 40% of half the primary away from the center point of the whole winding. Actually, that 40% is only 20% of the whole winding. If you add 20% to 50%, you have 70% of the winding.

Now, square .7 to get .49. If the whole primary has 5kΩ, then .49 × 5000 gives 2450 as the primary impedance. This is the primary impedance using one 40% tap and the opposite end of the winding.

These statements hold true if an 8Ω load is put on the 8Ω tap of the secondary. If an 8Ω load is put on the 16Ω tap of the secondary, the primary will look like 1225Ω.

Most builders of tube amps think that only one specific transformer will work on the output of their project. What I have just said might change that thinking. Most transformers are quite versatile. I have a Hammond 1650ON output transformer that has been adapted to many different tube loads with great success.

CHOKE

A choke—at least the kind you use in the audio world—is an iron core with only one winding on it. A choke is rated in henries and current-carrying capacity. Its DC resistance is so low that it is generally ignored.

A choke's value lies in its ability to do two things.

1. It can store energy. DC current flowing through the winding sets up an electric field that acts like a storage battery. When the current is shut off, the choke actually tries to keep it flowing. If the current flow subsides, the choke tries to keep it at its original level. If a bump of current comes along, the choke absorbs it in its magnetic field, thus preventing the bump from going further. It is a smoothing device. As such, it is a very useful component in power supplies.

In power supplies, the minimum value to use is given by the following formula: inductance in henries = the output voltage divided by the load current in milliamperes. A 300V supply with a 100mA load should have a choke of 3H or more. A choke's second ability is its resistance to the flow of AC current. However, this resistance varies with both the inductance in henries and the frequency.

Front Panels?

Download the free ›Front Panel Designer‹ to design your front panels in minutes ...

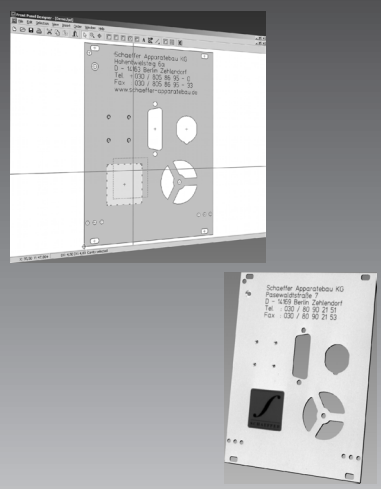

... and order your front panels online and receive them just in time

Unrivaled in price and quality for small orders

www.frontpanelexpress.com

auricap

Precision Wound
High Resolution Capacitors
Made in U.S.A.

World's finest capacitor, Sonically transparent, Superior technical specifications.

- *Auricaps are great parts, and represent a significant step forward in capacitor technology and audio-musical performance... Better and cheaper. What more can you ask for?*
  Jennifer White-Wolf Crock, Sr. Technical Editor - Positive Feedback Magazine
- *If you want absolute transparency, then you must give Auricaps a try.*
  Giorgio Pozzoli/TNTAudio.com
- *Auricap is the best I have tried by a long, long way.*
  Kendrick Pavey/AUDIOASYLUM.com

OEM & dealer inquiries invited.
Call (800) 565-4390

www.audience-av.com

FIGURE 4: FULL-WAVE DOUBLING CIRCUIT.

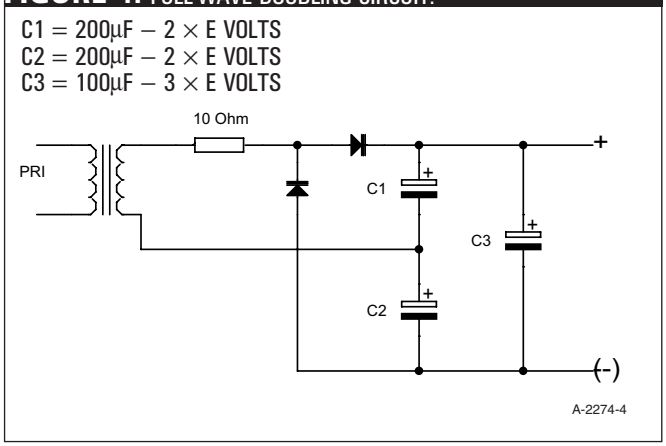

If the inductance is fixed at a certain value, then the resistance will be much higher at high frequencies than at low frequencies. Reactance = 2 × 3.1416 × the frequency × the number of henries in the choke. By the same figuring, if the frequency stays at a fixed value, increasing the number of henries increases the resistance to the flow of AC current.

From a practical standpoint, this means that in a single-ended amp with parallel or choke feed, the lows will be reduced a bit by the choke. Compensation for this can be included in the preamp.

If you have an SE amp with choke feed, the load impedance on the output tube looks like a very complicated situation. The tube plate is looking at two inductances in parallel. In many cases, the inductance of the choke is equal to the inductance of the primary on the transformer. They are in the circuit in an almost identical manner. Both have one end tied to the tube, and the other ends go to ground through a large capacitor.

Now for the differences that exist. The choke is carrying a large DC current, which will have no reactive effect on the tube if its iron core is big enough. It is, however, carrying a relatively small AC current to ground from the tube, the amount being governed by the reactance the choke presents.

TRANSFORMER

The transformer's primary may show a very high reactance if its secondary is open. But as soon as a load is put on this secondary, you have changed the situation substantially.

The primary impedance of this transformer is being controlled more or less by its secondary. In the case of a transformer with an impedance ratio of 325, 8Ω on the secondary is reflected in the primary as 2600Ω, 50Ω on the secondary is reflected as 16250.

Thus you can say that the transformer is the most important factor governing the load of a tube. Its impedance is very low compared to the impedance of the choke, and it is in essence the only load.

At this point, someone is going to bring up the fact that the inductances of the choke and transformer are in series with a capacitor and could be in resonance at some audio frequency. Forget it. With the value of components you use at audio frequencies, you will never be bothered with that problem.

Power transformers are rather commonplace items that you often take for granted. You either buy one and hope it fits the job or you pull one from the junk box and make it fit the job.

In spite of what you pick, it never seems to be big enough. So right now, resolve to use the biggest transformer you can obtain for the job at hand. Forty to 50% over what you think you need will always work out fine. A bigger transformer will have larger wire on the secondary. This means a lower resistance secondary, which is a definite plus.

RECTIFICATION

You can use either half-wave or full-wave rectification. But don't even consider the half-wave route because it just can't cut it. Too much hum for any audio purpose. I also caution you not to work from the power mains directly. It is too dangerous. Use a transformer.

There are three ways to get full-wave rectification.

1. Use two diodes with the center tap of the secondary on ground.
2. Use four diodes in a bridge circuit.
3. Go the voltage doubler route. Yes, there is a full-wave doubler circuit, which is used more often than you might think. It just takes a lot of capacitance (see *Figs. 1, 2, 3,* and *4*).

The number one route is the preferred one to take. If you use choke input, the transformer will love it. Output voltage is generally 0.9 × one-half of the total voltage out of the secondary. Using number one to capacitance input is harder on the transformer and may cause it to heat a little. With capacitance input, the output voltage is about 1.1 × one-half of the secondary voltage.

Going the second route, with four diodes, on a transformer intended for use with the two diode system, causes a little problem. If the transformer is rated at 200mA, you should not try to get 200mA out of it. It will run hot because the whole secondary is in use all the time. I would derate the transformer about 30%.

The bridge circuit provides two voltage outputs. One is the same as in the two diode system, and a second voltage twice that of the two diode system. You

CHECK OUT THE LATEST
BOOKS & PRODUCTS
on-line at
www.audioXpress.com
NEW!
Speaker Building 201
TLwrx Software
Back Issues on CD
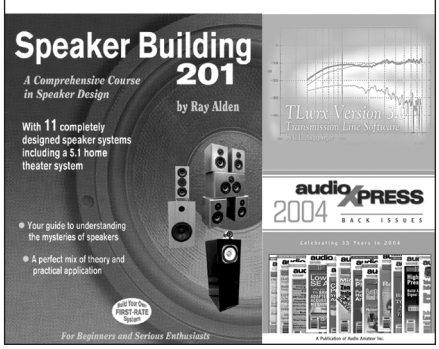

FIGURE 5: TWO-TRANSFORMER-FULL WAVE ADDITIVE CONNECTION.

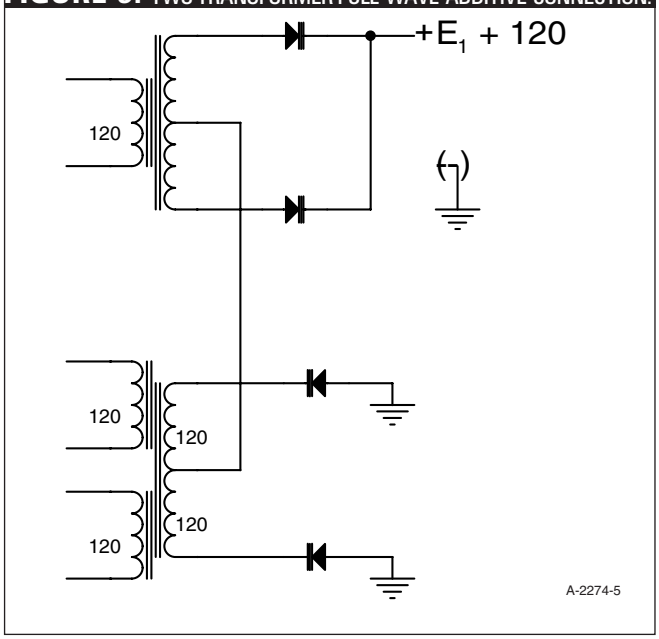

can alter both voltages by using either a choke or capacitor input. If the transformer secondary has no center tap, then only the higher voltage will be available.

With the voltage doubler circuit, the same caveats from the bridge circuit apply. The whole secondary is in use all of the time. The doubler system is a good one to use when you have a low voltage transformer without a center tap. You should be prepared to accept poor voltage regulation with a voltage doubling circuit. If your amp is running class A, there is no problem, as the load has very little variation.

A good transformer for use in the voltage doubling circuit is an isolation transformer that has a 120V primary and a 240V secondary. One rated at 100 to 150 VA would be suitable.

TRANSFORMER TIPS

You can alter the voltage obtained from any of these systems either up or down by using spare filament windings on the main transformer or by using a separate filament transformer. I would not recommend raising the transformer-rated primary voltage by more than 6 or 7%. To do so stresses the transformer too much. You can reduce the transformer primary voltage as much as you care to without damage.

The spare windings are used in series with the main transformer primary. You can wire them in aiding or opposing the supply mains. There is an unusual way to pick up an additional 45 to 115V on top of the main transformer supply if you have an isolation transformer with two separate primaries and two separate secondaries (*Fig. 5*).

Many times, the problem is not one of voltage, but of not enough current to do the job. You can parallel identical transformers without trouble, but don't try it with unlike transformers. If you have spare transformers around or can pick some up at a flea market, some of the configurations mentioned previously can enable you to put together a good supply at a reasonable cost.

Diodes sometimes can generate noise in the power supply. You can eliminate or greatly reduce this by the use of bypass capacitors and resistors as shown in *Fig. 3*.

I would like to add a thought here about what a power supply looks like to an amplifier. It makes a big difference in sound if the amp is looking at a low impedance supply.

With the average supply, you generally have about 40 to 80µF of capacitive filtering. This is not nearly enough to offset the highly inductive transformer and choke. The addition of 500 to 700µF on the output of the supply will lower the reactive impedance and make the supply look more like a resistor.

I think that a large capacitive output also acts as a regulator, and sometimes makes a regulated supply unnecessary. Believe me, it sure improves the response of the amp.

Many builders use DC on the filaments of their tubes. Here is a little tip to prolong the life of tungsten filaments: Put a DPDT switch in the filament line to reverse polarity every 100 hours. It is a proven fact that tungsten migrates from the filament with prolonged application of fixed polarity direct current. You can increase tube life 50 to 75% by switching polarity. *aX*

DIAMOND GROOVE

- Analogue Productions
- Audio Fidelity
- Cisco Music
- Classic Records
- Mosaic Records
- Simply Vinyl
- Speakers Corner
- Sundazed

Many other non-audiophile labels
Over 1,500 new vinyl titles in stock

www.diamondgroove.com
1-877-DGROOVE
info@diamondgroove.com

the whole sound of vinyl
for Canada and the world

Ready, willing and
AVEL

offering an extensive range of ready-to-go
toroidal transformers
to please the ear, but won't take you for a ride.

Avel Lindberg Inc.
47 South End Plaza
New Milford, CT 06776
tel: 860-355-4711
fax: 860-354-8597
www.avellindberg.com

Product Review

Back

New D.H. Labs Cables

By Gary Galo, Regular Contributor

PHOTO 1: D.H. LABS' NEW POWER PLUS AC CABLE FITTED WITH WATTGATE IEC-320I AND 5266I CONNECTORS (TOP), AND IN BULK FORM (BOTTOM).

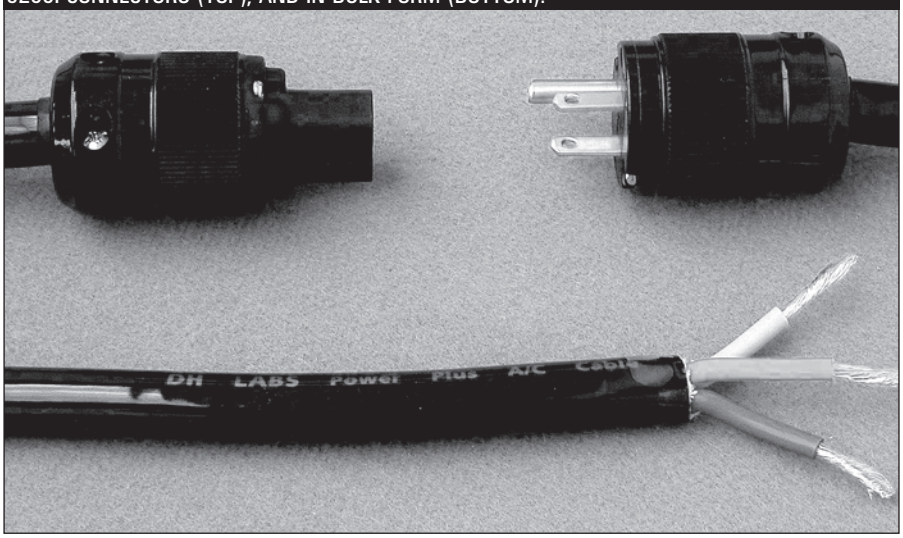

D.H. Labs Power Plus AC Cable; Pro Studio Interconnect Cable; High Copper Alloy Ultimate RCA Connector; Pure Silver Hookup Wire. D.H. Labs, 612 N. Orange Ave., Suite A-2; Jupiter, FL 33458; 561-745-6406; www.silversonic.com. Power Plus—$6/ft. bulk or $176 for 1 meter with AC connectors; Pro Studio—$7.95/ft. bulk; Ultimate RCA Connector—$16 ea.; Pure Silver Hookup Wire, 18AWG—$6.95/ft., 23AWG—$5.95/ft. Available from Parts Connexion (www.partsconnexion.com) and Welborne Labs (www.welbornelabs.com).

Over the past few years, D.H. Labs has emerged as a leader in high-performance audio cables, and their broad selection of products now ranges from the very affordable to the *ne plus ultra*. D.H. Labs has recently introduced several new products that reflect their commitment to high value, and that are sure to be of interest to DIY audiophiles.

POWER PLUS

Their new Power Plus AC Cable (*Photo 1*) is a 3-conductor cable manufactured with 12AWG stranded high purity OFC copper. The Power Plus AC Cable features low series resistance and inductance, and the three conductors are combined in a geometry that is said to reduce noise from outside sources, including the cable's own magnetic field.

I have two mono amplifiers in my system and didn't have enough connectors to make up two power cables, so I lent one to my audiophile friend Lorelei Murdie, whose ears I find extremely reliable. She and her husband now own a powerhouse NAD S200 power amplifier, so I figured that the robust D.H. Labs cable would have a good workout in their system. Their S200—much to my chagrin—was factory-supplied with a 16AWG power cord, which is woefully inadequate for a 225W/channel amplifier. At my suggestion they replaced this cable with a 14AWG power cord, and they were very pleased with the improvement in dynamics and smoothness.

Lorelei listens primarily to classical music, always at reasonable levels, and their Vandersteen 2Ci loudspeakers are a relatively easy load to drive, so she was skeptical about whether or not the Power Plus could further improve the system, beyond the generic 14AWG cord. She was pleasantly surprised by the Power Plus cable. The most impressive difference was improved smoothness in the treble region—the Power Plus took another layer of edge off her system. She also reported that the bass was tighter, and the treble cleaner and more detailed. Overall, she found the reproduction more musically pleasing to the ear than the generic 14AWG cord.

The Power Plus is available in bulk, or fitted with premium-quality AC connectors (IEC on the component end). If you buy it bulk, D.H. Labs recommends the Wattgate AC plugs sold by Parts Connexion and Welborne Labs. I am told that the Wattgate plugs are made by Marinco. Parts Express (www.partsexpress.com) also carries a full line of Wattgate and Marinco AC connectors.

PRO STUDIO

You may recall my review of D.H. Labs Air Matrix Interconnect cable (*aX* 10/02). The Air Matrix is available only as an assembled cable fitted with their Ultimate RCA Connectors. Many do-it-yourselfers have asked D.H. Labs to make a bulk cable better than their basic BL-1, and the Pro Studio is intended to fill that void (*Photo 2*). The Pro Studio cable uses D.H. Labs' proprietary 22AWG surface-treated, silver-plated, oxygen-free copper conductors, with a low-density Teflon dielectric.

The dielectric is similar to the one in the Air Matrix cable. With two conductors plus a heavy, 95% coverage braided shield, you can use the Pro Studio for both balanced and unbalanced interconnects. The capacitance is very low 12pF/ft (39pF/meter) balanced and 21pF/ft (69pF/meter) unbalanced.

Most high-end RCA connectors are made from brass or a brass alloy plated with gold. D.H. Labs' Ultimate RCA Connector is manufactured from D.H.

PHOTO 2: D.H. LABS' ULTIMATE RCA CONNECTORS (TOP), PRO STUDIOS DIY INTERCONNECT (CENTER), AND PURE SILVER HOOKUP WIRE (BOTTOM).

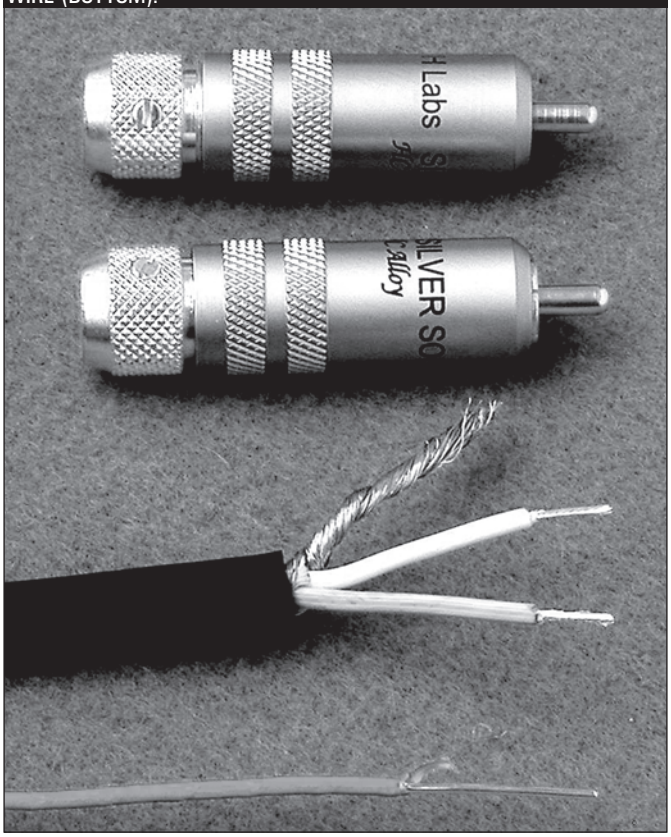

PHOTO 3: D.H. LABS' NEW RCA JACKS.

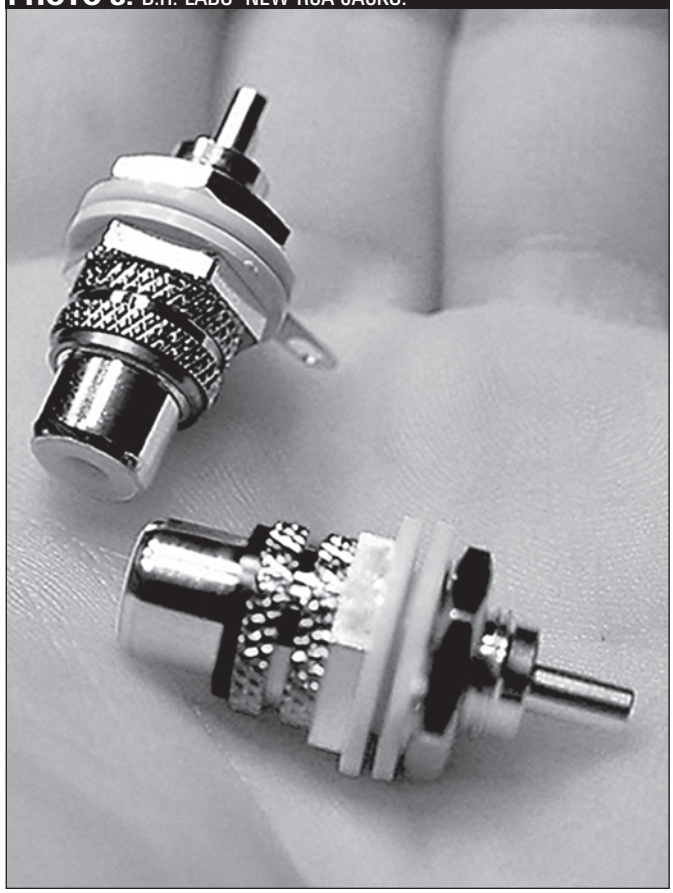

Labs' High Copper Alloy, which contains 99% pure copper with a gold finish of exceptionally high quality (*Photo 2*). The manufacturer offers concrete data showing the superior electrical conductivity of this connector compared to those of several of their high-end competitors, all of which use far less pure copper in their connectors. The outer cover on this connector is threaded onto the connector itself, forming a clamping system that makes a very tight ground connection.

The Pro Studio cable is a winner fitted with the Ultimate RCA Connector. This cable is much more than a halfway point between the BL-1 and the Air Matrix. Subjectively, the Pro Studio/Ultimate RCA combination brings you at least 75% of the way toward the exceptional performance of the Air Matrix, for condsiderably less money. It is clean, transparent, incredibly smooth and detailed, and availability in bulk form will make it a winner with DIY audiophiles.

The Ultimate RCA Connector is simply the finest I have used. In bulk form, the cable and connectors will cost you about $110 for a 1 meter pair, and will compete sonically with assembled cables costing several times more. Although I haven't tried it, D.H. Labs says that the Pro Studio also makes an excellent phono interconnect.

Just as I completed this review, D.H. Labs sent me a preliminary photo of a new, chassis-mount RCA jack, designed to interface with their Ultimate RCA Connector (*Photo 3*). This connector appears to be outside mount, and an outside nut is an integral part of the connector, which should make mounting very easy. The new connector should be available by the time you read this.

If you are looking for a premium hookup wire for your next audio project, D.H. Labs has introduced a line of Pure Silver Hookup wire designed to compete with the finest on the market (*Photo 2*). Available in 18AWG and 23AWG sizes, the conductor is 99.99% pure long grain silver covered with an air-spaced Teflon tape. Parts Connexion is carrying this wire under the D.H. Labs name, and Welborne Labs is selling it as their "Special Purchase Teflon Insulated Hookup Wire." Try this wire in your next preamp project—you won't be disappointed. *aX*

PASS DIY

Printed Circuit Boards

Key Components

Plans

Zen Variations

Pearl Phono

and more...

PO Box 12878
Reno, NV 89510

www.passdiy.com

book review

Back

Speaker Building 201

by Ray Alden

Review By Dennis Colin

PHOTO 1: SPEAKER BUILDING 201

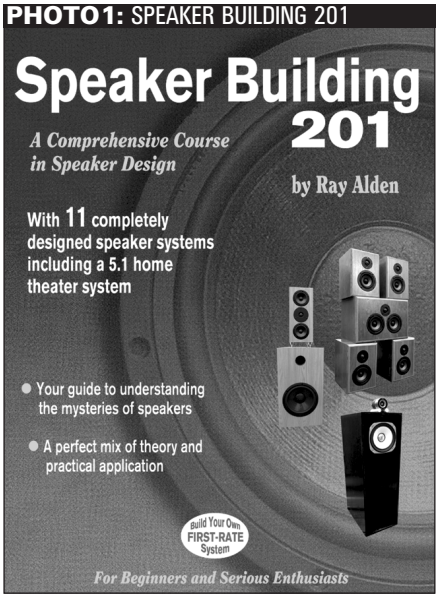

Speaker Building 201 is refreshingly reminiscent of the technical hobbyist books of the ′50s—comprehensive yet spirited, loaded with excellent illustrations, and with the apparently lost art of explaining a concept from the historical foundations (Ampère, Faraday, Ohm, Volta) to its present applications—all the while keeping it interesting. And whether discussing the science or the art, or proven examples of speaker construction, each chapter is a self-sufficient presentation of information—you can select any chapter of interest and obtain all you need on the subject.

Chapter 1, "The Adventure Begins," introduces the fundamental concepts of electricity, magnetism, and mechanics as they relate to loudspeaker driver operation. Also introduced are the occasional "math tips" to facilitate understanding of multi-variable relationships. Characteristics of drivers are clearly presented, particularly regarding their selection and appropriate enclosure matching.

Chapter 2, "The 'Big Three' Parameters and the Closed Box," discusses the forces acting in a driver, then elaborates on f_s, Q, and V_{AS}. Excellent illustrations, analogies, and description supplement the mathematical relationships with intuitive understanding, a "feeling" for the interactions.

Chapter 3, "The Vented Enclosure," presents the topic with the same clarity and depth; diffraction ("spreading") loss is also discussed.

Chapter 4, "Opening Pandora's Box," deals with sealed box dimensions, conversion calculations, and the programs "Speaker Box Designer—V1" and "Win ISD."

Chapter 5, "Special Applications," presents multiple-driver systems including push-pull, MTM ("D'Appolito configuration"), and dual voice-coil drivers.

Chapter 6, "Subwoofers," presents a most excellent and understandable description of the variety of subs ranging from the relatively simple sealed box to the 6th-order bandpass sub. Calculation techniques include both the raw math and "Bass Box" Pro software. To assist in your selection of a subwoofer type, performance characteristics are related to your musical tastes, as well as your max-SPL needs.

Design of the more esoteric subwoofer types, such as the "compounds" (push-pull, isobaric) and bandpass systems, is necessarily complex. But these systems are given not only the math relationships, but also a clear understanding of the physical/acoustic phenomena taking place, e.g., the constant-pressure coupling of the two woofer cones in an isobaric (literally meaning "constant

AUDIO TRANSFORMERS

AMERICA'S PREMIER COIL WINDER

Engineering • Rewinding • Prototypes

McINTOSH - MARANTZ - HARMAN-KARDON
WESTERN ELECTRIC - TRIAD - ACROSOUND
FISHER - CHICAGO - STANCOR - DYNACO
LANGEVIN - PEERLESS - FENDER - MARSHALL
ELECTROSTATIC SPEAKER TRANSFORMERS

Williamson Amplifier Transformer Specialist

WE DESIGN AND BUILD TRANSFORMERS
FOR ANY POWER AMPLIFIER TUBE

PHONE: [414] 774-6625 FAX: [414] 774-4425

AUDIO TRANSFORMERS
185 NORTH 85th STREET
WAUWATOSA, WI 53226-4601
E-mail: AUTRAN@AOL.com

NO CATALOG CUSTOM WORK

pressure") system. The resulting two-woofer compound is then understood in relation to overall system parameters.

One minor criticism is an incorrect statement on page 65: "There is no point in . . . building a subwoofer if you place it in a room too small to support the wavelengths of the lowest frequencies." This is a common misconception: while a small room cannot support long *waves*, the ears don't care about waves—they respond to *pressure* variations impinging upon the tympanic membrane (eardrum). Otherwise, how could headphones produce 20Hz (cleanly and powerfully with good phones), when the ear is now in a "room" of about one cubic inch?

What occurs is the well-known "room gain" ("cabin gain" in a car): Approximately below the frequency where a half-wavelength equals the longest room dimension, the air becomes pressurized as a whole, and is essentially "DC-coupled" to the net driver volume displacement (vent if present included). Compared with free-space (or large room) response, the woofers' output is boosted by 12dB/octave as frequency decreases, a fact taken advantage of by car stereo deep-bass fanatics (yours truly included).

Chapters 7 and *8* present, respectively, two-way and three-way crossovers, beginning with the fundamental properties of inductors and capacitors. These chapters are an excellent presentation of both mathematical analysis and practical considerations, with many beautiful graphs and intuitive-based illustrations, including voltage/current phasor diagrams and the responses of a variety of order-number crossovers. Zobel networks, notch circuits, and real-world ambiguities are also well-covered.

Chapter 9, "Hardware and Software," covers various testing and calculation tools, focusing on the relevant parameters including phase, cone excursion, and vent velocity.

Chapter 10, "Crossover Optimization and Measurement Techniques," begins with a fascinating discussion (and illustrations) of the 3D "Heyser spiral" showing the "real" and "imaginary" parts of the complex amplitude/phase versus frequency response of a speaker's impedance (or acoustic output). Then, practical examples of crossovers in successive stages of optimization are shown.

Measurement techniques, from swept sine wave to quasi-anechoic, are clearly described, with illustrations of microphone positions, and so on. For the curious, Fourier spectral analysis of some test waveforms (sine sweeps, square waves) are shown.

Chapter 11, "Eleven Speaker Systems," is the dessert you might want to devour first! Optimizing and measurements were performed by Dr. Joseph D'Appolito on some systems; and by Tom Roberts, speaker designer for Madisound, on others. The systems range from a small two-way, through several MTMs, a home-theater system, a horn-loaded unit, to some fairly large systems with integral subwoofers (and a standalone sub). Each system is presented complete with photo, materials list, schematic, and response measurements. This chapter alone is worth the price of the book!

Chapter 12, "Construction," is very practical and useful for those who have—and like to use—woodworking skills.

SUMMARY

This is simply a most excellent and unusual book. Unusual in its wide-gamut format, presenting complex material in such a way as to instill both analytical and intuitive understanding in the budding speaker enthusiast, yet also containing an absolute wealth of information—technical and practical—for the advanced speaker designer. Most highly recommended! *aX*

Available from Old Colony Sound Lab, PO Box 876, Peterborough, NH 03458, 603-924-9464, custserv@audioXpress.com, $34.95.

ABOUT THE AUTHOR

Dennis Colin graduated with a BSEE from the University of Lowell (MA) and is currently an Analog Circuit Design Consultant for microwave radios. Previously a band keyboardist and a recording engineer, he has been published in the *Journal* of the Audio Engineering Society. Colin has demonstrated the audibility of phase distortion at Boston Audio Society, and has designed the "Omni-Focus" speaker (bipolar coincidental with phase—linear first—order crossover), ARP 2600 analog music synthesizer, 1kW biamp and PWM supply at A/D/S, and Class D amps.

New Do-It-Yourself Starter Kits

BORBELY AUDIO 20th Anniversary 1984-2004
The FET Specialists

Targeted specifically for DIY audiophiles at any skill level desiring to build better audio.™

- All-JFET Class-A I/V Converter & Filter
- All-JFET MC/MM Phono Preamp
- All-JFET Class-A Line Amplifier
- All-FET Dual Low-Noise Regulator

New

Available now at

audiokits.com
888-863-3482

You're building the world's best amp .... why should it look the worst?
ezChassis™ is the answer

- Punched holes for inputs,valves, power supply, speaker terminals
- With 30+ labels (inputs/outputs)
- Strong construction. 17" Front
- Black painted chassis & screws
- Hundreds of ways to assemble
- Also heatsinks, handles & plugs
- Internet or Fax order

www.designbuildlisten.com

Look!!

Click http://www.eifl.co.jp
or send e -mail to info@eifl.co.jp
for more products information

Asano Amp Kits
(http://www.eifl.co.jp/index/export/asano.html)

300B SE STEREO

US$ 2,580+postage
(With WE300B+TANGO or SANSUI OPT)
US$ 1,900+postage
(With China 300B+TANGO or SANSUI OPT)

2A3 Loftin-White SE STEREO

US$ 2,100
+postage
(With RCA 2A3+TANGO or SANSUI OPT+Round meter)
US$ 1,700+postage
(With China 2A3+TANGO or SANSUI OPT+Rectangular meter)

E·I·F·L EIFL Corporation
1-8, Fujimi 2-chome, Sayama City, Saitama Pref. 350-1306 JAPAN.
Phone:+81-(0)4-2956-1178 FAX:+81-(0)4-2950-1667
E-mail:info@eifl.co.jp
Wire Transfer:MIZUHO BANK, SWIFT No.MHBKJPJT a/c # 294-9100866

A Winding Path
There is no music on a record!
Just a winding path of vertical
and lateral amplitude waves.

The time signature comes from
the spinning turntable platter.

Modern disc cutters can achieve
Wow and Flutter of 0.01%.
Shouldn't your turntable
do as well?

The
Audiophile Standard

KAB
Preserving The Sounds
Of A Lifetime
www.kabusa.com

book review

Back

The Artful Solderer

Reviewed By Gary Galo, Regular Contributor

The Artful Solderer. *By Lee Tingler. T.I Press, 5540 Amber Cove Way, Flowery Branch, GA 30542; 770-476-5337; 770-965-2661 (FAX); Email: order@solderbuddy.com; Web: www.solderbuddy.com. 39pp. $19.95.*

Lee Tingler has been involved in electronics for about 30 years, and claims to have made over 200,000 connections, mostly soldered. In *The Artful Solderer*, Tingler offers a concise guide to soldering technique, based on his years of work in the field. At 39 pages, *The Artful Solderer* is more of a pamphlet than a book, but it contains a great deal of useful information, especially for the novice.

Tingler begins with a few comments on the importance of craftsmanship. A page is devoted to safety considerations, including wearing eye protection, avoiding burns, and so on. Two pages are devoted to the basic requirements for an electronics toolbox. Tingler devotes quite a bit of space to selecting soldering tools, explaining the differences between soldering guns, irons, and the various types of tips that are available for irons. Like myself, he finds the 1/16″ chisel point tip the most useful.

He then takes you through a step-by-step procedure for making a good solder joint, from tinning, applying heat, applying the solder, and letting the joint cool. He includes photos to illustrate good and bad solder joints, and offers suggestions for cleaning up bad ones. He also emphasizes the need to properly tin new solder tips and to keep them clean, to improve performance and extend tip life.

Tingler offers a number of suggestions for preparing various types of wire for soldering, including speaker cable, microphone cable, and hookup wire, including how much insulation to remove. Soldering printed circuit boards is discussed, including surface-mount components, and the author provides tips on how to avoid damage to the board. He also covers spicing wires, dealing with oxidized wires, and emergency repair techniques.

PHOTO 1: THE ARTFUL SOLDERER

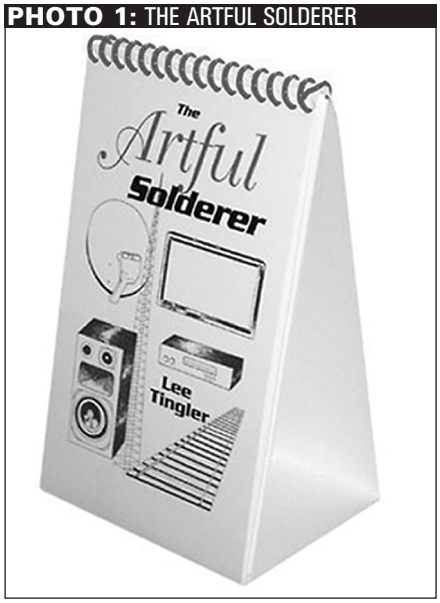

Solder removal is a problem that all of us face. Tingler shares my view in favor of solder suckers rather than wick, unless space prevents you from using a solder sucker. I have never liked solder wick and never use it. He doesn't mention the type of solder sucker that integrates the syringe with a soldering iron. My favorite is Radio Shack's veteran model 64–2060, still a bargain at $10.49.

For holding wires and other components in place for soldering, Tingler recommends the Solder Buddy, which he also sells. An American wire gauge chart is also included, giving diameter and resistance for AWG 2 through 82.

There are a few things missing from Tingler's book. In his discussion of various types of electronic solder, he mentions 60/40 and 63/37 tin/lead ratios, preferring the latter due to lower melting temperature and superior strength. He doesn't mention silver-content solders, such as SN62, which I use for

most electronics work. He also doesn't discuss tip materials and coatings. I always use the plated copper tips with my Weller/Ungar modular irons because they last much longer than bare copper. Tingler also left out flux removers (my favorite is Caig Laboratories' CaiKleen TRP).

The Artful Solderer is generously illustrated with photos and sketches. It is small enough to throw in a toolbox, and is printed on Yupo, a waterproof, tear-resistant synthetic paper for "tough on the road use." The information contained in the booklet is all pretty basic, and will be most useful to the electronics novice.

If you must look up any of the procedures while doing a field repair, you probably are not yet ready to go out into the field. If you are getting started in the electronics hobby, *The Artful Solderer* should be quite helpful. I also modestly suggest my article "Soldering" in *Audio Amateur* 3/94, pp. 30–35 (available from Old Colony Sound Lab, PO Box 876, Peterborough, NH 03458, 888-924-9465, 603-924-9467 (Fax), custserv@audioXpress.com). *aX*

PRE-ORDER YOUR COPY OF

audioXPRESS

2004 ON CD!

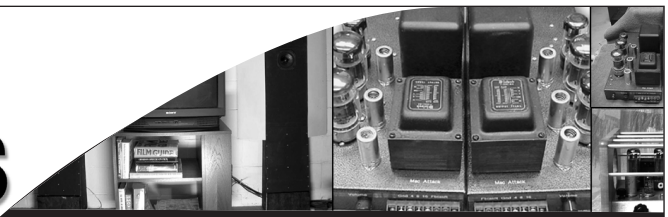

The 2004 issues of *audioXpress* on CD are being prepared right now. Pre-order a copy of the CD and receive free shipping*.

*FREE SHIPPING TO US ADDRESSES ONLY.

Each issue of the 2004 volume has been saved in Adobe Acrobat PDF format. The tables of contents have been gathered into a single file which is linked to the articles, etc. in each issue. Handy reference for your printed copies or an easy way to catch up on missed issues. Sh. wt: 1 lb.

CDAX4 .....$14.95 Subscribers price
.....$34.95 Non-Subscribers price

✔Yes, reserve my copy of *audioXpress* 2004 on CD and ship it to me for free*.

*FREE SHIPPING TO US ADDRESSES ONLY.

Payment:
❑ Check ❑ VISA ❑ Mastercard ❑ Discover ❑ American Express

Card No. Exp.

Account No:

Name Company

Street & No. City/St/Zip

Country

audioXpress, PO Box 876, Peterborough NH 03458-0876 USA
Toll-free: 888-924-9465 Phone: 603-924-9464 Fax: 603-924-9467
E-mail: custserv@audioXpress.com www.audioXpress.com

classified

Back

VENDORS

Mic and phono preamps, meters, filters, etc. all US built. **TDL Technology, Inc., 505-382-3173** **www.zianet.com/tdl**

Principles of Power, tube audio books, kits, FAQ **www.londonpower.com**

www.stillaudio.com
18 watt 0.6% distortion (no loop feedback) single-ended amplifier

FOR SALE
Clearaudio Virtuoso phono cartridge, mint, Proton AM/FM receiver excel. Tektronix 5400 Oscilloscope call.
Contact Al at **607-565-8438** or email: **ahalst@caservices.com**

www.borbelyaudio.com
DIY Starter Kits
www.audiokits.com
:http://homepage3.nifty.com/sk-audio/

ezChassis pre-punched amplifier chassis, now with optional silver, gold, or wood finishes.
www.designbuildlisten.com

visit audioXpress.com

SUBSCRIBE AND SAVE!

SAVE NEARLY $50
OFF THE COVER PRICE!

Call 888-924-9465
or subscribe on-line at
www.audioXpress.com.

dynaco-doctor
.com a division of curcioaudio
Replacement Parts / PCB's / Kits / Modules
Repair, Restore, Upgrade or Modify Your Dyna Amp or Preamp - DIY or Full In-House Service
Original Manuals / Guides / Dynaco Users Forum
Your Complete Dynaco Support Center

gear racks, media drawers and more
Factory direct since 1984
Free brochure (mention audioXpress)
Per Madsen Design (800) 821-4883
www.rackittm.com

SPEAKERBITS
Foam, cloth and rubber surrounds, spiders, cones, dustcaps, horn diaphragms, world's best voice coils & braid wire. Genuine foam surrounds for Dynaudio, Tannoy, Scan-Speak & more. Dealers welcome - email for your user ID to access trade prices. We ship worldwide.
www.speakerbits.com

Soundstring
CABLE TECHNOLOGIES™
FOR THE PUREST
See our color ad on the front inside cover.
For more information on our Patents and Technologies visit www.soundstringcable.com

meniscus®
"Big Posts"
&
all your speaker building needs.

616-534-9121
info@meniscusaudio.com
www.meniscusaudio.com

ALL ELECTRONICS CORPORATION
Electronic and Electro-mechanical Devices, Parts and Supplies. Many unique items.
www.allelectronics.com
Free 96 page catalog
1-800-826-5432

www.AUDIOCLASSICS.com
AUDIO • HOME THEATER • VIDEO
BUY • SELL • TRADE • REPAIR
Phone/Fax: 800-321-2834

AD INDEX

ADVERTISER **PAGE**
ACO Pacific Inc. 51
Antique Radio Classified 39
Audience 41
Audio Amateur Corp.
audioXpress 2004 on CD 49
audioXpress subscription 50
Classifieds 50
Old Colony Catalog online 42
Loudspeaker Design Cookbook 35
Speaker Building 201 – The Alden Book 34
audioasylum.com 25
Audiokits.com 47
Audio Consulting 49
Audio Transformers 46
Avel Lindberg Inc. 43
Cardas CV3
Chelmer Valve 19
Design Build Listen Ltd 47
Diamond Groove 43
E-Speakers 57
EIFL 48
Front Panel Express 41
Hammond Manufacturing 11
Harris Technologies 15
K&K Audio 33
KAB Electro-Acoustics 48
Kimber Kable 7
Laboratoire, JC Verdier 21
Linear Integrated Systems 53
Madisound Speakers 62
Marchand Electronics 13
MCM Electronics 59
Nelson Audio 31
Orca Designs 5
Parts Connexion 29
Parts Express Int'l., Inc. CV4
Pass Laboratories 45
Plitron Manufacturing 37
P-N-F Audio 13
Reliable Capacitors 39
Selectronics 17
Sencore 27
Solen, Inc. 61
Soundstring Cable Technologies CV2
Test Equipment Depot 33
Thorens 23
Usher Audio 8
Velleman 3
VTA 5
WBT-USA/ Kimber Kable 7
World Audio Design 16

CLASSIFIEDS
All Electronics 50
Audio Classics 50
Borbely Audio 50
Curcio Engineering 50
Design Build Listen 50
London Power 50
Per Madsen Design 50
Soundstring Cable Technologies 50
Sound Technology Inc 50
Speakerbits 50
TDL Technology 50

Yard Sale

FREE ADS FOR SUBSCRIBERS

Yardsale Guidelines:

1. Submissions accepted from subscribers to *audioXpress* magazine only. You must include your subscription account number with each submission.
2. Submit your ad to Yard Sale, PO Box 876, Peterborough, NH 03458. Or fax to (603) 924-9467, or e-mail to editorial@audioXpress.com.
3. Please be sure your submission is legible. We are not responsible for changing obvious mistakes or misspellings or other errors contained in ads.
4. We will not handle submissions over the phone. Please do not call to verify acceptance or inquire about the status of your submission.
5. Each submission will be used until the next issue of the magazine subscribed to is published.
6. Maximum 50 words. No accompanying diagrams or illustrations or logos will be used

Accuracy, Stability, Repeatability

Will your microphones be accurate tomorrow?

Next Week? Next Year? After baking them in the car???

ACO Pacific Microphones will!

Manufacturered to meet IEC, ANSI and ASA standards.
Stainless and Titanium Diaphragms, Quartz insulators
Aged at 150°C.

Try that with a "calibrated"consumer electret mic!

ACO Pacific, Inc.
2604 Read Ave., Belmont, CA 94002
Tel: (650) 595-8588 FAX: (650) 591-2891 e-mail acopac@acopacific.com

ACOustics Begins With ACO™

VTA

HIGH-END, HAND CRAFTED TUBE AUDIO
LINE STAGES
HEADPHONE AMPLIFIERS
POWER AMPLIFIERS
SOLD DIRECT TO YOU!
WWW.VACUUMTUBEAMPS.COM

Xpress Mail

Back

SERVO DESIGN

Would it be feasible to use Daniel Ferguson's servo system (Sept. '04 *aX*) with a high-quality "plate" amp designed for subwoofers? I own a Kiega amp with high- and low-level inputs and 250W (probably a realistic figure) of power into an 8Ω load, and am currently driving an Adire Audio Shiva DVC 12″ driver in a large transmission line enclosure. I'd love to switch to a compact enclosure and utilize one of Mr. Ferguson's servo controllers if he thinks that would work.

Neil Walker
Elgin, Ill.

Dan Ferguson responds:

It should be more than feasible to build a good-performing servo with these components, both of which have excellent specifications. The Adire woofer seems particularly well suited with low f_s and very high excursion capability. The trade-off will be a somewhat lower SPL output capability than your current setup. If your application is high-accuracy music reproduction, then I think you will be quite pleased with the result.

However, I have some reservations about using a single 12″ servo driver for home theater. You could try it and see. If you find that the headroom is insufficient, you could simply turn off the feedback system when watching movies. If you take this approach, make the enclosure large enough for closed-box Q to be around 0.9 to 1.0, which should give you the best of both worlds.

Good luck with your servo design. Readers would be interested in hearing how it turns out.

I found Dan Ferguson's two articles in *audioXpress* about a servo dual voice coil subwoofer (Nov. '03 and Sept. '04) very interesting. I always wondered why no one had done this before, but your articles and a little digging told me that someone has. I think you're on the right track and would like to offer a few observations.

Analog Devices makes a series ADXL xxx of very small, light, and relatively inexpensive accelerometers. I recognize that this is not what you set out to do, but thought you might be interested. In addition, they (www.analog.com) have a rather naïve student paper "Using an accelerometer to make an active subwoofer" that you might find interesting, because it is full of obvious mistakes.

In your project you first tried and then abandoned your attempt to cancel the magnetic coupling between the driving and pickup coils by using a 0.1Ω shunt and differential amplifier A. This didn't work, because the mutual inductance coupling causes the picked up voltage to be shifted 90° from the current.

If I = A sin wt, then V = M(dI/dt) = MAw cos wt, and no amount of sine wave will cancel the cosine wave. If you add A sin wt and B cos wt, you get $\sqrt{(A^2 + B^2)}$ sin (wt + Ang), where Ang = arc tan (B/A); this is always bigger than A and B.

The choices are to differentiate the current signal before subtracting it or use a mutual inductor instead of a shunt to generate the canceling signal. You know how to make a differentiator, so I'll talk about the mutual inductor idea.

You can make a simple mutual inductor by slipping a high permeability magnetic core on one speaker lead and winding a bunch of turns on the core. The "unloaded" output voltage from the winding will be M (di/dt), just like the pickup in the second voice coil which is causing your problem. You then use this signal instead of the output from differential amplifier A.

P.S. If you put a low impedance load across the secondary (burden), this is called a current transformer, which then produces an output voltage in phase with the current. You don't want a current transformer for this application.

Walter Schillinger
(waschil@attglobal.net)

Daniel Ferguson responds:

Your observation that the current derivative should be taken before the summer is correct, and I tried a number of times to make that work. If the passive voice coil voltage is V = dx/dt + M(di/dt), then the cone velocity dx/dt = V – M(di/dt), and the cone acceleration (a) = d/dt[V – M(di/dt)], or a = dV/dt – M(d^2i/dt^2). Thus the current term must eventually pass through a differentiator twice.

Every time I tried to do this, the servo wailed like a banshee. As you pointed out, the problem is due to phasing. The phase angle difference between the reference signal and the output is called the "phase margin." When the phase angle reaches 180°, the phase margin is zero and the system becomes completely unstable.

The feedback loop has a built-in 90° phase lead after the differentiator, which uses up half of the available phase margin, so there's little room left for error. When you introduce a second derivative term, it must be *precisely* cancelled out or the result is instability. I was never able to do that with sufficient accuracy to get complete cancellation.

The approach I presented in my first article was based on empirical results—after the theoretical paths led to failure. Over time, I was eventually able to generate some spectacular waveforms—but not at high output levels.

Then came your thoughtful letter. I thought about using the iron core-based pickup on the speaker lead that you suggested but had reservations about introducing another phase shift due to the unknowns. After several days of mulling this over, I was convinced that you were onto something and then it hit me—what was needed was to exactly replicate a dual voice-coil.

The published voice-coil inductance for the driver I'm using is 0.18mH. I had a spare 0.30mH air-core inductor on hand, so I stripped off the windings, doubled them in half, and carefully hand-wound a bifilar 0.15mH inductor. I connected one winding in series with the driven voice-coil and used the other as a sensor to

pick up the cross-talk component. It worked!

I was able, for the first time, to get the electronic "accelerometer" to duplicate the complex waveforms generated by the condenser mike at every frequency within the subwoofer's passband. What a thrill! And after a few more days of fiddling, I was finally able to close the loop and reproduce music at about the same levels as without the current term.

There's still more work to do, but thanks to your help, I now have hope for success. Thanks very much for your assistance.

I was very pleased to read Daniel Ferguson's "A Servo Dual Voice Coil Subwoofer" and "12″ Dual Voice Coil Servo Subwoofer System," in the November 2003 and September 2004 issues. These are the kinds of articles that should be published more often in *audioXpress*, because they offer valuable research and development by amateurs that have enough will and faith to follow, clarify, and experiment with their own ideas.

I would like to make the following remarks and comments on Mr. Ferguson's work.

1. Is the SPL driven by velocity or acceleration?

The best answer to this question was given by Lord Rayleigh when calculating the mechanical impedance of a piston of radius a, radiating acoustic power in a half-space. His results were:

If $a \leq \lambda/\pi$, the acoustic power radiated by the piston is proportional to the square of the piston acceleration. So to keep the power constant, the piston acceleration must stay constant. In this frequency domain, it is the piston acceleration not the piston velocity that drives the SPL.

If $a > \lambda/\pi$ the acoustic power radiated from the piston is proportional to the square of the piston velocity. So to keep the power constant, the piston velocity must stay constant. In this frequency domain, it is the piston velocity not the piston acceleration that drives the SPL.

These statements are similar to those made by J.F. Novak, but they apply to the radius not on the loudspeaker cone diameter.

2. True loudspeaker cone velocity

Because passive and driven voice coils are tightly wound together, it is evident that the measured voltage across the passive voice coil is, using notations defined in the articles, $v_s = c(dx/dt) + M(di_1/dt)$. There is no mystery in this relationship—simply the Ampere and the Lenz or Faraday laws. The strategy proposed by Mr. Ferguson is to remove the coupling term $M(di_1/dt)$ to obtain the true loudspeaker cone velocity. But doing this requires a current-sensing device to measure i_1, then a differentiator to get di_1/dt, then an adjustable voltage gain to scale the signal as $-M(di_1/dt)$, prior to summing it to v_s. I was surprised to find no mention of this current differentiator and scaling voltage gain.

The test setup described in the first article is a simple and clever one having the enormous advantage of giving the true loudspeaker cone velocity. So, I suggest using it as a reference to verify objectively that the passive voice coil signal processing system is effectively working properly.

3. Servo-regulator concept

I am not surprised that Mr. Ferguson faced great instability problems when using his preliminary proposed concept. All designers who have tried to develop such a regulator know that it is a highly difficult question. Today, the knowledge on closed loop circuits is more elaborate and many efficient strategies are available with a high probability of success. Consequently, I suggest Mr. Ferguson look at these modern concepts. He will probably take great advantage from this effort and find the suitable solution, giving him the capability to complete his job successfully.

I hope these remarks and comments will be of some help to author Ferguson.

Pierre Touzelet
Velizy France

Dan Ferguson responds:

At the beginning of my second article, I explained in some detail why the current term was left off the prototype subwoofer design—namely, that I could not get the phasing relationships exactly matched to avoid instability at high output levels. The details are given in my reply to Walter Schillinger (previous letter).

In summary, two differentiations are required to accurately model the current-to-voltage and velocity-to-acceleration relationships, and the second differentiation exacerbates things considerably. The second-order term must be modeled exactly to obtain cancellation. Any "leakage" results in instability.

The approach I used in my first article, using a single differentiator, was arrived at empirically and was another compromise. It provided a visible waveform improvement at lower volume levels and was, in fact, stable at those levels. After adding a phase shift circuit later on, I was eventually able to obtain exceptional square-wave tracking, but could not overcome all of the volume limitations.

I like your idea about using the drone woofer as a waveform reference. I had used it primarily as a frequency-response reference in the past, but used a microphone as the waveform reference. Using your approach should provide purer visual representation of the crosstalk component. The one drawback is that gain settings would be unique to the test woofer and not transferable to the 12″ woofer I'm currently using.

Regarding stability, the system is inherently stable except for the 90° phase lead introduced by the differentiator, which consumes half of the available phase margin. In fact, there is

JFETS
ULTRA LOW NOISE
LS843 - 3nV/Hz typ
TIGHT MATCHING
LS843 - 1 mV max
◇ N & P Channel
◇ Duals & Singles
◇ Custom Screening
◇ Spice Model Library
◇ Die, SMT, Thru-Hole
◇ No Order Minimum
Second Source for Domestic & Foreign JFETs & Bipolars
Full Service U.S. Manufacturer of Specialty Linear Products
LINEAR SYSTEMS
4042 Clipper Court
Fremont, CA 94538
510-490-9160/510-353-0261(Fax)
E-mail: Sales@Linearsystems.com
WWW.LINEARSYSTEMS.COM

quite a bit more gain margin available than I am using. The reason I chose to use lower gains is that the differentiator phase shift causes less accuracy at higher gains, not more.

In my opinion, stability will not be improved significantly by a more sophisticated controller algorithm. The 90° phase lead is inherent in the mathematical derivative function and places the use of a velocity sensor at a distinct disadvantage compared to other approaches such as installing an accelerometer on the driver's moving mass. In spite of the limitations and theoretical compromises in the prototype's design, let's not lose sight of the fact that I was able to attain an overall loop gain of 5.65 and a response that tracks the input within 1dB. This is because the current term represents only approximately 10% of the feedback signal content.

Thanks for your suggestions. Input like yours and others will enable me to continue to work to refine this approach to servo subwoofer design.

CATHODE STRIPPING

In response to Edwin Pettis' article ("Why Power Tubes Arc," Nov. '04), I can state as a first-hand witness that oxide cathodes can indeed be damaged by applying anode B+ with the cathode cold—because I managed to observe the effect when I worked at Svetlana. I put a Svetlana 300B on a test jig and repeatedly hit the anode with 450V with the filament cold. This caused the filament to "snap" due to the electrostatic attraction of the filament to the cathode (no, it was not caused by mechanical vibration; I was careful). Flakes of oxide were seen to fall off the filament. When I tested the tube afterward, its bias point had changed significantly—I needed to change the negative grid bias from –103V to –122V to obtain the same 60mA plate current.

Mind you, this is a directly heated oxide filament. Indirectly heated tubes (of modern design, anyway) are less prone to the effect. I tried the same abuse on a 6550C and saw no noticeable effect. Older indirectly heated tube designs, however, might be susceptible to it.

This is more of a question of being conservative versus taking risks. If I were designing a large audio power amp, regardless of which tubes I used for output, I'd consider it prudent to time-delay the plate voltage. It isn't done in lower-cost amps for simple cost reasons.

Admittedly very few textbooks talk about cathode stripping. This is because in the old days tube rectifiers applied plate voltage slowly, so it was rarely seen.

Today's big radio transmitters, with silicon plate rectifiers, usually apply plate voltage with a time delay, even if it isn't likely to damage the tubes. This is considered good design. A big transmitter can run plate voltages of 12kV or more at several amps, and it's a good idea to warm the tube filaments before hitting them with that much power—especially if there is stray gas in a tube. It doesn't make itself known until you put on the B+, whereupon the tube can arc, discharging and destroying itself and the power supply. Radio stations have been burned down by a transmitting tube that became slightly gassy. Better safe than sorry.

And I frequently see low-cost Chinese tube hi-fi amps that were damaged by a single gassy tube. Sometimes it just happens, even if the customer was very careful and bought well-tested NOS tubes. Gas in a tube is difficult, if not impossible, to detect sometimes. And the average tube hi-fi owner usually does *not* own a tube tester.

Reference Help

You can start with: http://www.vaxxine.com/phil/scopes/arnoud/weyer.txt and http://www.john-a-harper.com/tubes201/.

Power Vacuum Tubes Handbook by Jerry Whittaker (CRC Press, 1999) states on page 118 that oxide emitters are more easily damaged when subjected to bombardment from high-energy particles.

My copy of *Electron Tubes in Industry* by Henney and Fahnestock (3rd edition, McGraw-Hill, 1952) warns against applying anode voltage to a cold cathode (page 177). Unfortunately, this section deals with mercury-vapor thyratrons, not vacuum tubes. Both *Electronic Designer's Handbook* by Landee, Davis, and Albrecht (McGraw-Hill, 1957) and *Electronic Engineering Principles* by John D. Ryder (Prentice-Hall, 1952) state that oxide cathode coatings are susceptible to oxygen poisoning and damage by gas ion bombardment. So they are usually seen only in tubes for use below 1000V.

Eric Barbour
synth@metasonix.com

Edward T. Dell responds:

Mr. Pettis' views of the relative importance of possible cathode stripping do not agree with others of some repute, as evident from the correspondence from Regular Contributor Eric Barbour. Eric was a regular staff member in Svetlana's California research facility for a number of years and is a Senior Editor at *Vacuum Tube Valley* magazine.

I am on record since 1966, when my article "The Brute" was published in *Stereophile*. It advocates delayed B+ plate voltage as an attempt to prolong output tube life. I used multiple capacitor bypassed diodes to rectify the delayed B+ plate voltage by using a separate heater supply for the amplifier's tubes.

Although I no longer have the reference that advocated this technique, I am quite certain that the early claims of Mullard for the use of the GZ34 tube rectifier were the source for my choice. The GZ34 was said to have a heating time of 11 seconds, which matched that of the EL34 and the KT types from Genalex. This meant that the cathodes were fully heated, or nearly so, before the B+ was applied to the plates, presumably avoiding any stress to the cathode coatings. The heating time of 5U4G rectifiers was supposedly only 5.5 seconds, if my memory is correct, although the tube manuals do not give data on the heating times, except for mercury vapor types.

Amperex, the US sales organization for the Dutch Philips tubes, ran a series of ads for the various types in *Audiocraft* magazine. The GZ34 was featured in several of these in 1958. The ad lists five characteristics of this rectifier, the fifth one being, "protection of costly power output tubes through delayed warm-up."

Amperex was the US subsidiary of Philips, whose libraries exhibit the thorough and painstaking research which went into their tube designs. The GZ34 is obviously a smaller, more rugged rectifier with evident quality features.

I think one of the advantages of amateur construction practice is to build in as many operational features as possible since the design is not a candidate for mass production with limiting competitive cost factors. Stock-car enthusiasts will understand this motivation. In the case of output tube cathodes, even a small longevity advantage seems reasonable.—**E.T.D.** *aX*

High-End Preamp, Part 1

By Benjamin Hinrichs

The modern design of the preamplifier yields audiophile specs, convenient operation, and an attractive price. This is made possible by using a top-end digitally controlled attenuator/amplifier IC.

Reproduced, with permission, from *Elektor Electronics* magazine, © 2004 Segment B.V., Beek (Lb.), The Netherlands, www.segment.nl.

Analogue audio electronics appears to have entered a dormant stage. In our present age of CDs, DVDs, and MP3, traditional preamplifiers have been relegated to the role of signal distribution and, primarily, adjusting the volume level.

Our expectations for a modern high-quality preamplifier are that in addition to being easy to use, it should perform these signal distribution and volume adjustment functions with the greatest possible accuracy and the least possible distortion. And that is exactly where things start to get difficult.

Volume controls are commonly implemented using potentiometers, which are available in a wide variety of price ranges and types. Since we are normally dealing with a stereo signal, we need two mechanically coupled potentiometers. The decisive factor is the tracking of the two potentiometers, since this determines how closely the volumes of the right and left channels will match each other. Poor tracking is especially noticeable (and disturbing) at low volume settings. If we also want to have a balance control, we need an additional set of coupled potentiometers, and the tracking errors will add together.

The maximum permissible tracking error for "audiophile" sensibility is 3dB, but ideally it should be less than 1dB. As can easily be seen from *Table 1*, these values are clearly exceeded by normal carbon-film potentiometers, and even high-quality carbon-film potentiometers have difficulty maintaining adequate tracking accuracy with increasing age.

An audiophile alternative to potentiometers is to use high-quality, multi-position rotary switches with close-tolerance resistors. However, the right-hand column of the table shows that suitable special rotary switches having extremely low crosstalk and contact resistance cost around $140–160, which is rather expensive.

The disadvantage of this solution involves more than just the price (we will need two or three such switches for the volume and balance controls and the input selector switch, if present), since rotary switches cannot be remotely controlled.

If we wish to have the convenience of remote control as well as excellent tracking, there's no getting around a design using conductive-plastic potentiometers with a motor and the associated control electronics and mechanical parts. This also involves considerable effort and expense, and just about everything must be duplicated for a balance control.

THE PGA2311 STEREO AUDIO VOLUME CONTROL IC

Admittedly, the idea of using a "digital" IC for volume adjustment, and furthermore controlling it using a microcontroller, may evoke a skeptical frown from many an audiophile. Ten years or more ago, this skepticism would certainly have been justified, but the semiconductor industry has made enor-

FIGURE 1: FUNCTIONAL BLOCK DIAGRAM OF THE PGA2311. THE ATTENUATION AND GAIN ARE CONFIGURED USING A 3-WIRE SERIAL BUS.

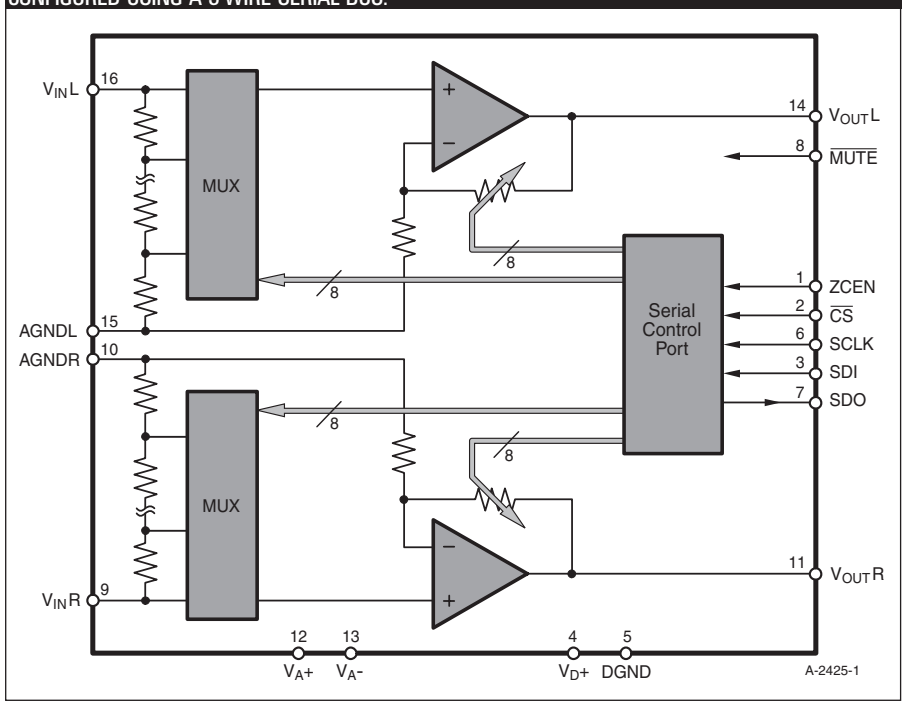

TABLE 1.

Tracking errors and price indications of various types of volume control

TYPE	TRACKING ERROR [dB]	APPROXIMATE price [£]
Carbon-film potentiometer	>3	3
High-quality carbon-film potentiometer	0.5–3	10–20
Conductive plastic potentiometer	0.1–0.3	25–55
Rotary switch	0.1	80–90
Motor and accessories	–	12–80
PGA2311PA	0.1	2.5–12

TABLE 2.

Volume control ICs suitable for use in this project

TYPE	DYNAMIC RANGE [dB]	THD+N [%]	CHANNEL separation [dB]	UOUT (MAX) [Vpp]
CS3310-KP	116	0.001	–110	7.5
PGA2310PA	120	0.0004	–126	27
PGA2311P	120	0.0004	–130	7.5
PGA2311PA	120	0.0002	–130	7.5

mous progress in this area. All of the major functions can now be integrated into a single chip, with results that can easily hold their own against the best mechanical solutions.

The Texas Instruments PGA2311 volume control IC used in this project is moderately priced and provides outstanding tracking without any degradation of tracking accuracy when balance adjustment is used, and it also has very good technical specifications. Another major advantage is that it can be digitally configured. This makes user-friendly operation possible (including remote control).

The PGA2311, whose internal structure is shown in *Fig. 1*, is a digitally controlled analogue stereo volume control with certain refinements. The two channels can be independently adjusted over a range of –95.5dB to +31.5dB in steps of 0.5dB, which yields an adjustment range of 127dB. The tracking error between the two channels, as well as the absolute setting accuracy of each of the channels, is ±0.05dB. This naturally means that a balance adjustment can also be implemented without any problems, since the high absolute setting accuracy prevents any offset from occurring. Another noteworthy feature is that the IC can directly drive 600Ω loads.

The multiplexer (MUX) switches individual resistors to set the attenuation. After the attenuator, the signal passes through an output buffer, which can also provide gain via an adjustable feedback resistance.

The IC is controlled via a serial SPI interface. Clock signal SCLK transfers a single 16-bit word to the IC via the SDI line. The first eight bits set the volume level for the right channel, while the second eight bits set the level for the left channel. The minimum value (0) represents Mute, and the maximum value (255) represents a gain of +31.5dB.

For fully noise-free switching, zero-crossing detection can be enabled via the ZCEN lead. If it is enabled, the IC analyzes the music signal and attempts to perform the switching during a zero crossing. If no zero crossing is detected within 16 milliseconds, the switching is performed without waiting any longer. Due to system design constraints, the ramp function of the software does not work properly if zero crossing detection is enabled.

In principle, four different types of ICs can be used in this circuit. *Table 2* lists the differences among these ICs. The original design was developed for

FIGURE 2: CIRCUIT DIAGRAM OF THE MAIN CIRCUIT BOARD, WHICH IS DIVIDED INTO AN ANALOGUE PART AND A DIGITAL PART.

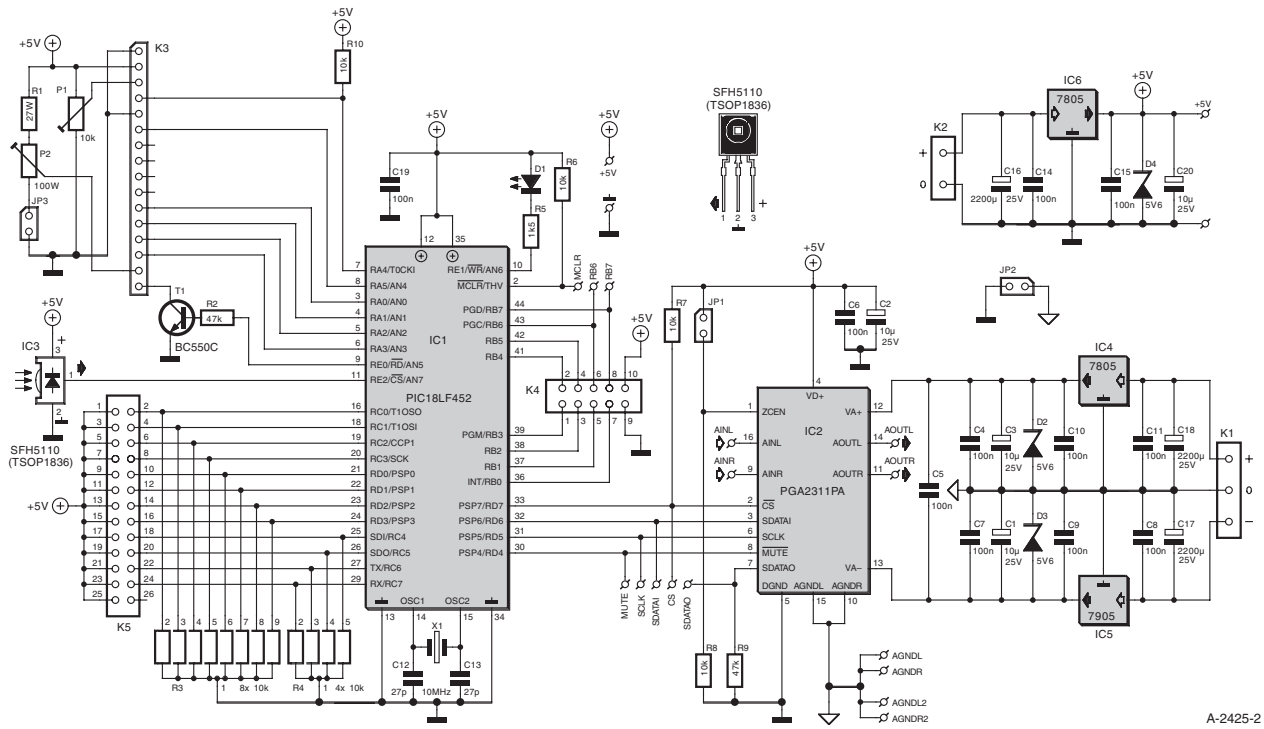

the Crystal (Cirrus Logic) type CS3310. The equivalent competitive product from Texas Instruments is the PGA2310, which is not only pin-compatible, but also has significantly better internal specifications. A particularly attractive feature of the latter IC is that it can handle signals up to 27V pp if the analogue supply voltage is increased to 30V. The improved type PGA2311 has even better channel separation, and the selected "A" version has a better specification for total harmonic distortion plus noise (THD+N). For this reason, we selected the PGA2311A for this project.

We can also mention the PGA4311 in passing. This is a four-channel version of the PGA2311 and is only available in the SOIC package. It can be used with only minor modifications to the circuit board layout and software.

THE CONTROL CENTER

The main circuit board, which forms the control center for the preamplifier, requires surprisingly few components. This is due to the high integration density of the two ICs used here. By far the

PHOTO 1: HIGH-END PREAMP.

FIGURE 3: BLOCK DIAGRAM OF THE PREAMPLIFIER. THE OPTION OF CONNECTING ADDITIONAL PGA2311 ICS IN PARALLEL, AS INDICATED BY THE DASHED OUTLINE, IS DESCRIBED IN PART 2.

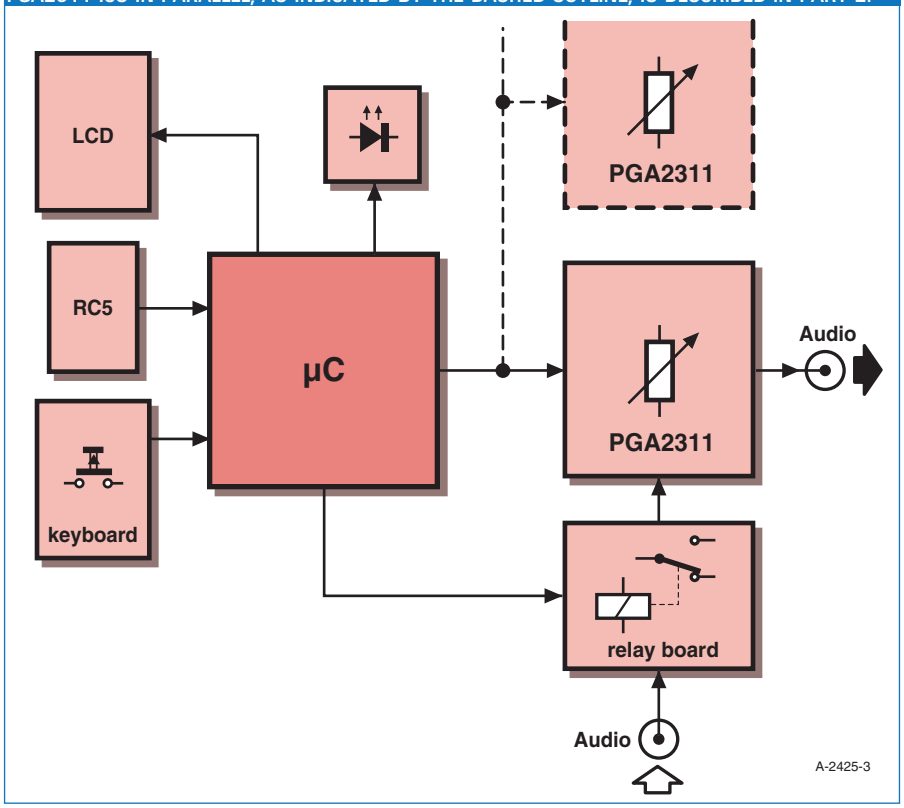

FIGURE 4: THE HARMONICS OF THE 1KHZ SIGNAL LIE BELOW –116DB.

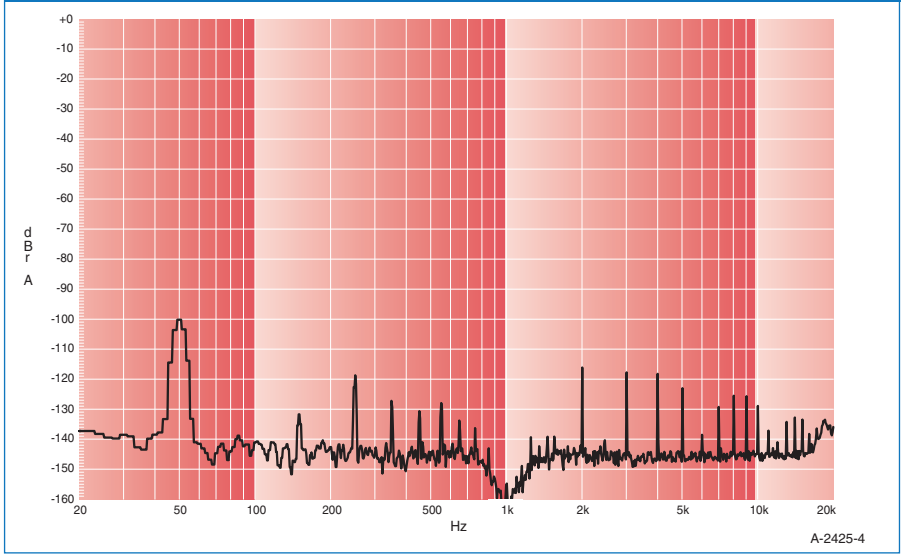

majority of the components are used to generate clean supply voltages.

The circuit is split into an analogue portion and a digital portion. The digital portion contains a Microchip PIC18LF452 microcontroller clocked at 10MHz by a crystal oscillator. This microcontroller has 8-bit registers and 16-bit instruction words. Microchip has not shown much flair in assigning part numbers to its PIC microcontrollers. For instance, the PIC16F84, PIC16F628, PIC16F877, and PIC12F675 belong to the PIC14 family, while the PIC18LF452 used here belongs to the PIC16 family.

The PIC18LF452 has a Flash program memory with a capacity of 32Kb (which is adequate for the rather extensive software), 1.5Kb of RAM, and a 256-byte EEPROM. Its 31 stack levels provide adequate maneuvering room for calling functions and procedures if the contents of all of the registers are written to the stack to allow the called procedure to use the registers. When control is returned to the calling procedure, the register contents are retrieved from the stack to allow the calling procedure to continue processing from the point where it transferred control. If frequently used subroutines are implemented using functions and procedures, the resulting interleaving of program execution can quickly exceed the capacity of a relatively shallow stack.

Before discussing the software in any more detail, let's have a look at the peripheral resources available to the microcontroller. The volume control (IC2) is connected to the microcontroller via the serial SPI bus. In addition, the microcontroller can select the PGA2311 using the CS line, and it can mute the output by placing a Low level on the MUTE line. These four lines, as well as

THE PROJECT

This project has a modular structure, so it can easily be adapted to individual preferences. It consists of a general-purpose power supply board, an input selector board, and the main circuit board, which holds the volume control IC and microcontroller. An LC display module, a keypad, and an IR remote control unit complete the package. The hardware and software are described in this article, which is the first of two parts. The other two circuit boards are described in Part 2, which will appear in the next issue of *audioXpress*. Modifying the control program for the microcontroller is also described in Part 2.

If you build all of the circuit boards as described, you will have a complete, remotely controllable preamplifier with input selection and function display. However, you can also dispense with the input selector and use only the volume control capability. If you wish, you can also omit the display, or you can omit the volume control IC on the main circuit board and use the remainder of the circuit as a remotely controllable relay circuit board for various applications. It is also possible to operate several volume controls in parallel, for instance in order to construct a multichannel amplifier. For this purpose, only the volume control ICs have to be fitted to the main circuit boards for the additional channels. The control software for the microcontroller can be adapted to suit almost any imaginable application without reprogramming the microcontroller.

PHOTO 2: FRONT VIEW.

the data output line (SDO), are externally accessible to allow several volume controls to be connected in parallel (as described in Part 2 of this article).

The remainder of Port D and all of Port C are fitted with pull-down resistors (consisting of the two SIL arrays R3 and R4) and routed to pin header K5, to which the pushbutton switches for controlling the preamplifier are connected.

K5 pins	Function
1&2,. . . , 15&16	Channels 1–8
17&18	Volume Down
19&20	Volume Up
21&22	Volume Left
23&24	Volume Right

The functions are essentially self-explanatory, but as you might imagine, additional functions are also implemented using combinations of buttons. All of the functions can also be selected using a remote control unit. IC3 is a 36kHz infrared receiver, which filters, demodulates, and cleans up the received light signal and boosts it to TTL levels, all without a single external component. An RC5 decoder is built into the software, so all types of RC5 remote control units (Philips, Grundig, etc.) can be used to control the preamplifier. The IR receiver is connected to RE2, which is one of the three Port E lines.

The configuration options are so manifold that without a clearly organized display presentation you could quickly lose track of where you are, particularly when programming the basic settings. Via Port A, the microcontroller software drives an LC display with two lines of 16 characters and background illumination. In normal operation the display shows the channel names and volume setting, while in Set-up mode it is used to select channel designations and basic volume control settings. Pull-up resistor R10 connected to RA4 is necessary because this port lead has an open-drain output and thus cannot switch to a High level without a pull-up resistor. Trimpot P1 adjusts the display contrast, while trimpot P2 adjusts the brightness of the background illumination. JP3 extends the adjustment range.

The microcontroller can switch the background illumination on or off via port line RE0 and transistor T1.

The microcontroller drives the relay board via K4. Each of the port lines RB0–RB7 selects one of the eight audio inputs. The behavior of the Status LED (D1) can be configured using the Set-up menu. This is described in more detail later on, along with the significance of the three lines MCLR, RB6, and RB7 that are led out from the board.

The main circuit board has separate power distribution for the analogue and digital portions. The ground potentials must be connected at a suitable location via wire bridge JP2. The single +5V digital supply voltage and the symmetrical ±5V analogue supply voltages are stabilized in the traditional manner using fixed voltage regulators with the customary buffer and decoupling capacitors. For all three voltages, 5.6V Zener diodes are provided as "backup" safety devices in case excessively high voltages appear on the outputs of the fixed voltage regulators.

OPERATION

After switch-on, the software checks whether reasonable values are located in the EEPROM. If this is not the case, such as immediately after the microcontroller has been programmed, default values are loaded. Otherwise the software loads the stored values and configures the volume control accordingly.

When a volume control button is pressed (Up, Down, Left, or Right), the software checks whether the adjustment is possible and whether the lower or upper limit of the adjustment range has been reached. Pressing the Up and Down buttons simultaneously causes the preamp output to be muted. Pressing the Left and Right buttons simultaneously restores the balance to the middle position, with the volume being set to the average of the values for the two stereo channels. If one of the input channel buttons is pressed, the channel is changed, with the output being muted during switching. Alternatively, the preamplifier can be configured via the Set-up menu to use a ramp. In this case, when the channel is switched the volume is first ramped down and then ramped back up again after the channel change.

An offset can be assigned to each channel, which is useful if the signal sources have different volume levels. The offset is applied to the set volume level when the associated channel is selected, and when a different channel is selected it is automatically removed. If an offset would cause one of the volume limits to be violated, it is ignored. The channel name selected using the Set-up menu is shown on the display. All of the functions of the preamplifier can be controlled using an RC5-compatible remote control unit. Naturally, the preamplifier can be freely configured using the Set-up menu to allow an existing RC5 remote control unit to be used to control all of its functions.

The selected configuration settings are stored in the microcontroller EEPROM and are thus available each time the preamplifier is subsequently used.

SET-UP

The software has default values for all configuration settings. All of the func-

MEASURED PERFORMANCE

Confidence (in the data sheets) is good, but measurement (by the *Elektor Electronics* lab) is better! The results of the FFT analysis of a 1kHz signal with an amplitude of 1 Veff indicate two things. First, the overall harmonic distortion figure of 0.0012% is dominated by the induced 50Hz mains noise (at –100dB) if the measurement is made over a bandwidth of 20Hz to 20kHz. Second, the first three harmonics of the test frequency are located in the range of –116dB to –118dB. If the bandwidth range for the measurement is shifted to 100Hz–200kHz, the THD+N value drops to only 0.0005%. This is a fantastically low value.

In order to further reduce the effect of mains interference, it is recommended to separate the mains input and power supply board as far as possible. Fully enclosing the main circuit board and relay board (inside a tinned sheet-metal box located inside the main enclosure, for example) could also have a beneficial effect.

Test results at unity gain (0dB)	
Nominal input sensitivity	200mV
Nominal output voltage	200mV
Maximum output voltage	2.4V RMS (THD+N = 0.01%)
Input impedance	10kΩ (input selected)
	∞ (input not selected)
Output impedance	< 0.6Ω
Bandwidth *	0–3MHz
	0–150kHz (gain 31.5dB)
Harmonic distortion (THD+N) *	0.0005% (1kHz, B = 100Hz – 22kHz)
	0.0012% (1kHz, B = 80kHz)
	0.002% (20Hz – 20kHz, B = 80kHz)
Signal to noise ratio (S/N) *	100dB (B = 22kHz)
	113 dBA
Channel separation **	> 88dB (1kHz)
	> 62dB (20kHz)
Crosstalk **	< 98dB (1kHz)
	< 88dB (20kHz)

* at Vout = 1V
** with open input terminated in 560Ω

PHOTO 3: REAR VIEW.

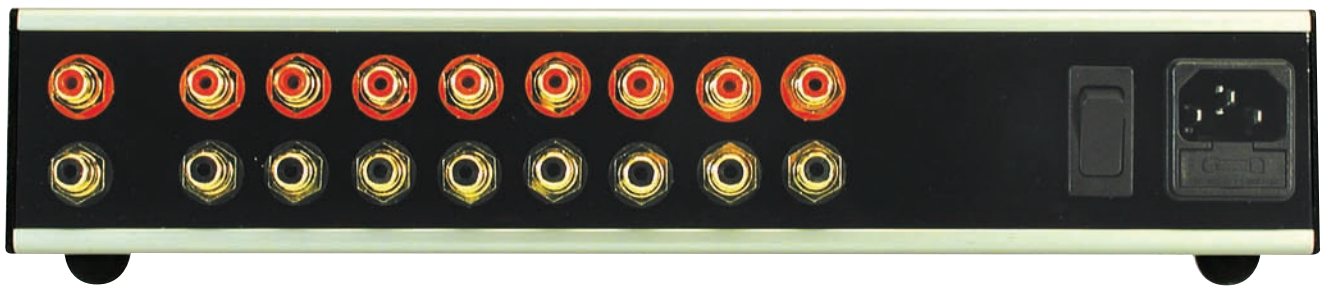

tions of the software can be adapted to individual needs via the Set-up menu. To enter the Set-up mode, hold the Channel 1 button pressed while switching on the preamp.

The Set-up configuration can only be modified using the control buttons on the preamplifier; it cannot be adjusted using the remote control. The buttons have the following functions in the Setup mode:

DOWN	Next entry
UP	Previous entry
LEFT	Exit
RIGHT	Enter

1) RC5 IR SET-UP

Reads an RC5 code from a remote control unit, displays the code, and assigns it to one of the following buttons: Channel 1–8, Down, Up, Left, Right, or Mute.

Defaults

Configured for a Grundig remote control unit.

Buttons

LEFT	Exit
RIGHT	Next

2) RC5 IR TEST

Reads and displays an RC5 code from a remote control unit. Intended to be used to check settings made using IR Set-up. Can also be used to test an RC5 remote control unit.

Button

LEFT	Exit

3) MAXIMUM VOLUME

Sets the maximum allowable volume level in dB.

Default

+31.5dB (maximum)

Buttons

DOWN	Reduce volume level
UP	Increase volume level
LEFT	Exit

4) RAMP

The ramp function gradually decreases the volume before switching channels and gradually restores it afterwards. The ramp function can be enabled or disabled, and the delay between successive volume steps can be configured. Enabling the zero crossing detection function (JP1) can impair the operation of the ramp function.

Defaults

Use ramp: Yes
Ramp delay: 15ms

Buttons

DOWN	Use ramp: Yes/No Ramp delay: –1ms
UP	Use ramp: Yes/No Ramp delay: +1ms
LEFT	Exit
RIGHT	Next

5) RELAY TEST

Energizes all relays for testing.

6) INPUT TYPE

This allows the input configuration to be set to either 8 channels (Single) or 2 × 4 channels (Double). This is useful if you want to switch not only the signal leads but also the ground leads. The input type should also be set to Double for balanced signal sources. In the Double mode, the relays are switched in pairs as follows: RE1+RE5, RE2+RE6, RE3+RE7, and RE4+RE8.

Default

Single

Buttons

DOWN	Single/Double
UP	Single/Double
LEFT	Exit

7) OFFSETS

An offset can be defined for each channel. It is applied when the channel is selected and removed when a different channel is selected. If applying an offset would violate one of the volume limits (Mute or Maximum Volume), it is not used. The value is shown in dB.

Defaults

Channel 0–8: 0dB

Buttons

DOWN	–0.5dB
UP	+0.5dB
LEFT	Exit
RIGHT	Next

DRIVERS:
- ATC
- AUDAX
- ETON
- FOSTEX
- LPG
- MAX FIDELITY
- MOREL
- PEERLESS
- SCAN-SPEAK
- SEAS
- SILVER FLUTE
- VIFA
- VISATON
- VOLT

CUSTOM COMPUTER AIDED CROSSOVER AND CABINET DESIGN

SOLEN CAPACITORS AND INDUCTORS - USED BY THE MOST DISCRIMINATING LOUDSPEAKER MANUFACTURERS.

HARDWARE

HOW TO BOOKS

Contact us for the free Solen CDROM Catalog.

SOLEN
4470 Avenue Thibault
St-Hubert, QC, J3Y 7T9
Canada
Tel: **450.656.2759**
Fax: 450.443.4949
Email: **solen@solen.ca**
Web: **www.solen.ca**

BK-16 Kit

Madisound is pleased to offer the **BK-16 folded horn kit.**

FOSTEX

We have chosen the **Fostex FF165K** 6.5" full range for use in the BK-16 cabinet. The **FF165K** has a **Kenaf fiber cone**, inverted foam surround and aluminum dust cap.

The **FF165K** is run full range with a frequency response out to 15kHz. The **T90A** super tweeter has been added to cover the upper frequencies. The **T90A** is a top-mount horn tweeter with an **Alnico magnet**. The tweeter is rolled off on the low end with a **Fostex Tin & Copper foil capacitor.** The system frequency response is 55Hz to 35kHz at 95dB.

The **BK-16** cabinet is made from **Baltic Birch** plywood and is sold flat, unassembled, unsanded and unfinished. Cabinet dimensions are 9.75" W x 14.75" D x 29" T.

The kit includes:

- Pair of Cabinets - Flat
- Pair of FF165K - full range
- Pair of T90A - horn tweeter
- Pair of DB-Cup - Input cup
- Pair of Crossovers
- Nordost 2-Flat wire for tweeter
- Instructions

Kit Price: $635.00 /pair

Parts without cabinets: $439.00 /pair

Cabinets only: $98.00 each

MADISOUND SPEAKER COMPONENTS, INC.
8608 UNIVERSITY GREEN
P.O. BOX 44283
MADISON, WI 53744-4283 U.S.A.
TEL: 608-831-3433 FAX: 608-831-3771
e-mail: info@madisound.com
Web Page: http:/www.madisound.com

8) CHANNEL NAMES

Each channel can be assigned a name selected from the following list: Aux, Aux2, CD, CD2, DAC, DAC2, DVD, DVD2, DVD-Audio, DVD-Audio2, Line, Line2, Phono, Phono2, SACD, SACD2, Tape, Tape2, Tuner, Tuner2, TV, TV2, VCR, VCR2, Video, Video2, Sat, Sat2, DCC, DCC2, MD, MD2, DAT, DAT2, PC, PC2.

Defaults

Channel 1: CD
Channel 2: Phono
Channel 3: DVD
Channel 4: SACD
Channel 5: DVD-Audio
Channel 6: DAC
Channel 7: Tape
Channel 8: Line

Buttons

DOWN	Next list item
UP	Previous list item
LEFT	Exit
RIGHT	Next

9) HARDWARE SET-UP

Configures the type of hardware used. This only affects what is shown on the display. The options are Normal (preamp), Input Only (channel selection only), and Volume Only (volume adjustment only).

Default

Normal

Buttons

DOWN/UP	Normal/Input Only/ Volume Only
LEFT	Exit

10) LED SET-UP

Sets the LED behavior. Options: Delay Off, Always Off, Always On.

Default

Delay Off

Buttons

DOWN/UP	Delay Off/Always Off/ Always On
LEFT	Exit

11) LED SET-UP

Sets the behavior of the LCD background illumination. Options: Delay Off, Always Off, Always On.

Default

Delay Off

Buttons

DOWN/UP	Delay Off/Always Off/ Always On
LEFT	Exit

12) POWER-UP VOLUME

Sets the switch-on behavior. This menu can be used to configure two settings. The first setting controls the switch-on behavior and has the following options: Last (set the volume to the same level as when the preamp was switched off), Mute, Mute → Last (muted on switch-on, with the previous volume setting being restored after a button is pressed), and Preset (always use a configurable preset value).

The second setting is the preset value. The current volume level can be stored as the preset value by pressing Up or Down.

Default

Last
Preset values: Mute, Mute

Buttons

DOWN/UP	Last/Mute/Mute → Last/ Preset (store current volume as preset)
LEFT	Exit
RIGHT	Next

13) RESTORE DEFAULTS

Restores the predefined default configuration settings. This also occurs if a newly programmed microcontroller without reasonable configuration values in the EEPROM is fitted.

Default

Volume: Mute
Channel: 1
All others: see above

aX

REFERENCES

1. www.ti.com
   http://focus.ti.com/docs/prod/folders/print/pga2311.html
2. www.jeffrowland.com/Concentra%20Page.htm
   www.jeffrowland.com/dacs.htm
3. "Top of the Range Volume Control," *Elektor Electronics*, Oct. 2000, pp 32 ff.
4. www.cirrus.com
   www.cirrus.com/en/pubs/rdDatasheet/3310.pdf
5. www.microchip.com
   www.microchip.com/download/lit/pline/picmicro/families/18fxx2/39564b.pdf